JENSEN® AUDIO + VIDEO COMPONENTS

SERVICE MANUAL

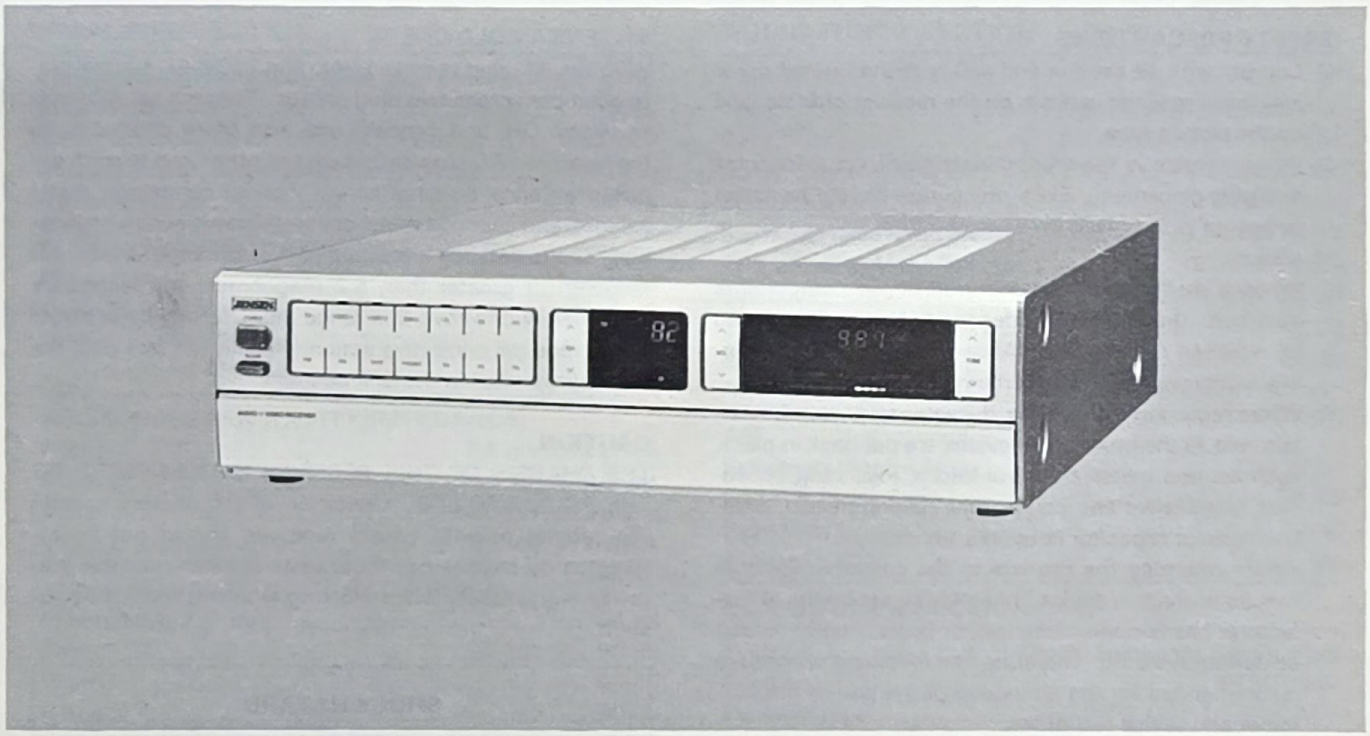

AUDIO+VIDEO RECEIVER AVS-1500

JENSEN

FOR PARTS AND SERVICE INFORMATION CALL 800-323-0221 toll free
IN ILLINOIS CALL 312-671-4760

SAFETY CAUTION

Before servicing the chassis, it is important that the service technician read and follow the safety precautions outlined below.

CRITICAL COMPONENT REPLACEMENT

- Replacement parts which have special safety characteristics are identified by Black shading on the schematics.
- Replace these critical components with genuine Jensen replacement parts.
- Do not degrade the safety of the set through improper servicing.

SAFETY PRECAUTIONS

- Comply with all caution and safety related notes on or inside the receiver cabinet, on the receiver chassis, and on the picture tube.
- When service is required, maintain correct lead dress and part placement. Extra precaution should be taken to assure proper lead dress in the high voltage circuit area.
- When a malfunction has occurred, those components or circuits that indicate evidence of abnormality should be replaced or corrected. Always use the manufacturer's safety specified replacement components.
- When replacing a chassis in the cabinet, always be certain that all the protective devices are put back in place, such as: non metallic control knobs, insulating fishpapers, adjustment and component covers/shields, isolation resistor capacitor networks, etc.
- Before returning the receiver to the customer, be sure that no protective device built into the set by the manufacturer has become defective, or inadvertently defeated during servicing. Therefore, the following checks are recommended for the continued protection of the customer and sevice technician.

LEAKAGE CURRENT HOT CHECK

Plug the AC line cord directly into a 120V AC outlet (do not use an isolation transformer in this check). Use a leakage current tester which complies with American National Standards Institute (ANSI C101.1-1971 "Leakage Current for Appliances"), and Underwriters Laboratories (UL) 1410. Measure for leakage current from all exposed metal parts of the cabinet (antenna, handle, bracket, metal cabinet, screwheads, metal overlays, control shafts, etc.) to a known earth ground. The test should be conducted with the AC power switch ON, and then repeated with the AC power switch OFF. Any leakage current measured must not exceed 0.5 mA with the AC line cord inserted in the AC supply circuit receptacle. Any measurement not within the limits outlined above are indicative of a potential shock hazard and corrective action must be taken before returning the set to the customer.

ANTENNA COLD CHECK

With the AC plug removed from the 120V AC source, place a jumper across two plug prongs. Turn the set AC power switch ON, and connect one lead of an ohmmeter to the jumpered AC plug and touch the other lead to each exposed antenna terminal screw, coaxial connector, metal cabinet, and exposed metal cabinet screws (when applicable). The resistance measured should not be less than 1.0 megohm or greater than 5.2 megohms. Any resistance value below or above this range indicates an abnormality which requires corrective action. Repeat the test with the AC power switch in the OFF position.

CAUTION

THE CHASSIS OF THIS RECEIVER IS CONNECTED TO THE AC POWER LINE. Operation of the chassis outside the cabinet or with covers removed should not be attempted by anyone not thoroughly familiar with the precautions necessary when working with this type of equipment.

SHOCK HAZARD

120V AC RMS CHASSIS TO EARTH GROUND POTENTIAL. USE ISOLATION TRANSFORMER DURING SERVICING.

TABLE OF CONTENTS

SPECIFICATIONS 1
LOCATION OF CONTROLS 2
DESCRIPTION OF CONTROLS 5
FUNCTIONAL BLOCK DIAGRAM 9
WIRING DIAGRAM 10
DISASSEMBLY INSTRUCTION 11
PARTS LOCATION 12
ALIGNMENT PROCEDURE 17
CIRCUIT DESCRIPTIONS 25
TROUBLE SHOOTING 44
PRINTED BOARD 53
SCHEMATIC DIAGRAM 69
EXPLODED VIEW OF SET 73
PARTS LIST 75

SPECIFICATIONS

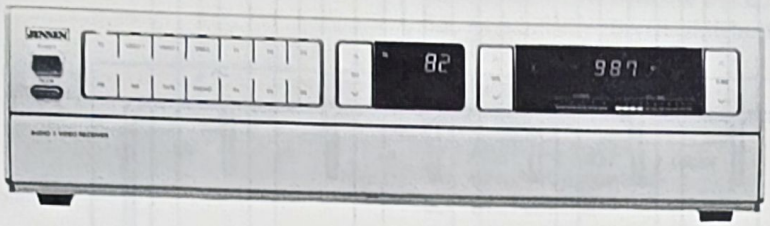

AMPLIFIER SECTION

Continuous power output, RMS, each channel into 8 ohms at rated distortion 50W
Total Harmonic Distortion at Rated Output ..... <0.05%
Intermodulation distortion at Rated Output ..... <0.05%
Damping Factor 40

AUDIO FREQUENCY RESPONSE:

Phono (RIAA) ..... ±0.5 dB
Tape (20 Hz - 20 kHz) ..... ±1 dB
Video 1 (20 Hz - 20 kHz) ..... ±1 dB
Video 2 (20 Hz - 20 kHz) ..... ±1 dB

AUDIO INPUT SENSITIVITY/IMPEDANCE:

Phono ..... 2.5 mV/47k ohms
Tape ..... 150 mV/47k ohms
Video 1 ..... 150 mV/47k ohms
Video 2 ..... 150 mV/47k ohms

AUDIO SIGNAL TO NOISE RATIO (IHF-A):

Phono (MM), 2.5 mV ..... 86 dB
Tape ..... 90 dB
Video 1 ..... 90 dB
Video 2 ..... 90 dB

AUDIO OUTPUT LEVEL/IMPEDANCE

Tape ..... 150 mV/10k ohms
Video 1 ..... 150 mV/10k ohms
Video 2 ..... 150 mV/10k ohms

VIDEO INPUT SENSITIVITY/IMPEDANCE

Video 1 ..... 1.0V P-P/75 ohm, unbalanced
Video 2 ..... 1.0V P-P/75 ohm, unbalanced

VIDEO OUTPUT LEVEL/IMPEDANCE

Video 1 ..... 1.0V P-P/75 ohm
Monitor ..... 1.0V P-P/75 ohm
RF Output ..... Switchable CH 3-4

TONE CONTROLS

Bass ..... 100 Hz ±10 dB
Treble ..... 10 kHz ±10 dB
Loudness Control ..... 100 Hz +7 dB, 10 kHz +4 dB, 20 kHz +7 dB

AUDIO TUNER SECTION

FM:

Type ..... Frequency Synthesized, PLL
Sensitivity ..... 12.8 dBf/1.2 μV at 75 ohms
50 dB Quieting, Mono ..... 19.2 dBf/2.5 μV
50 dB Quieting, Stereo ..... 40.8 dBf/30 μV
Signal to Noise Ratio Mono/Stereo ..... 82 dB/74 dB
THD at 1 kHz, Mono/Stereo 0.08%/0.15%
Selectivity, 400 kHz ..... 75 dB
Stereo Separation 1 kHz ..... 45 dB
AM Suppression ..... 60 dB
Antenna ..... 300 ohm/75 ohm

AM:

Sensitivity (Ferrite Ant) ..... 250 μV/m
Signal to Noise Ratio ..... 50 dB
Selectivity ..... 40 dB
Antenna ..... Ferrite Bar

VIDEO TUNER SECTION

Type ..... Digital Frequency Synthesized
System ..... NTSC Color
Tuning Range ..... VHF 2-13, UHF 14-83, CATV Mid Band A-1, Superband J-W Hyperband AA-WW
Sound Frequency Response ..... 65 Hz - 15 kHz
Antenna
VHF/CATV ..... 75 ohm, unbalanced
UHF ..... 300 ohm, balanced

GENERAL

Power Requirements ..... AC-120V/60 Hz
Power Consumption 150W
Power Outlets SW/UNSW 200W/200W
Dimensions ..... 17"W x 4-3/8"H x 18"D
Weight ..... 27 lbs.

This information is provided as preliminary specifications for retailers only and is subject to change without notice.
DNR™ is a registered trademark of National Semiconductor.
The shape, appearance and colors of this component constitute a trademark of Jensen Sound Laboratories, Division of International Jensen Inc., an Esmark Company.

LOCATION OF CONTROLS

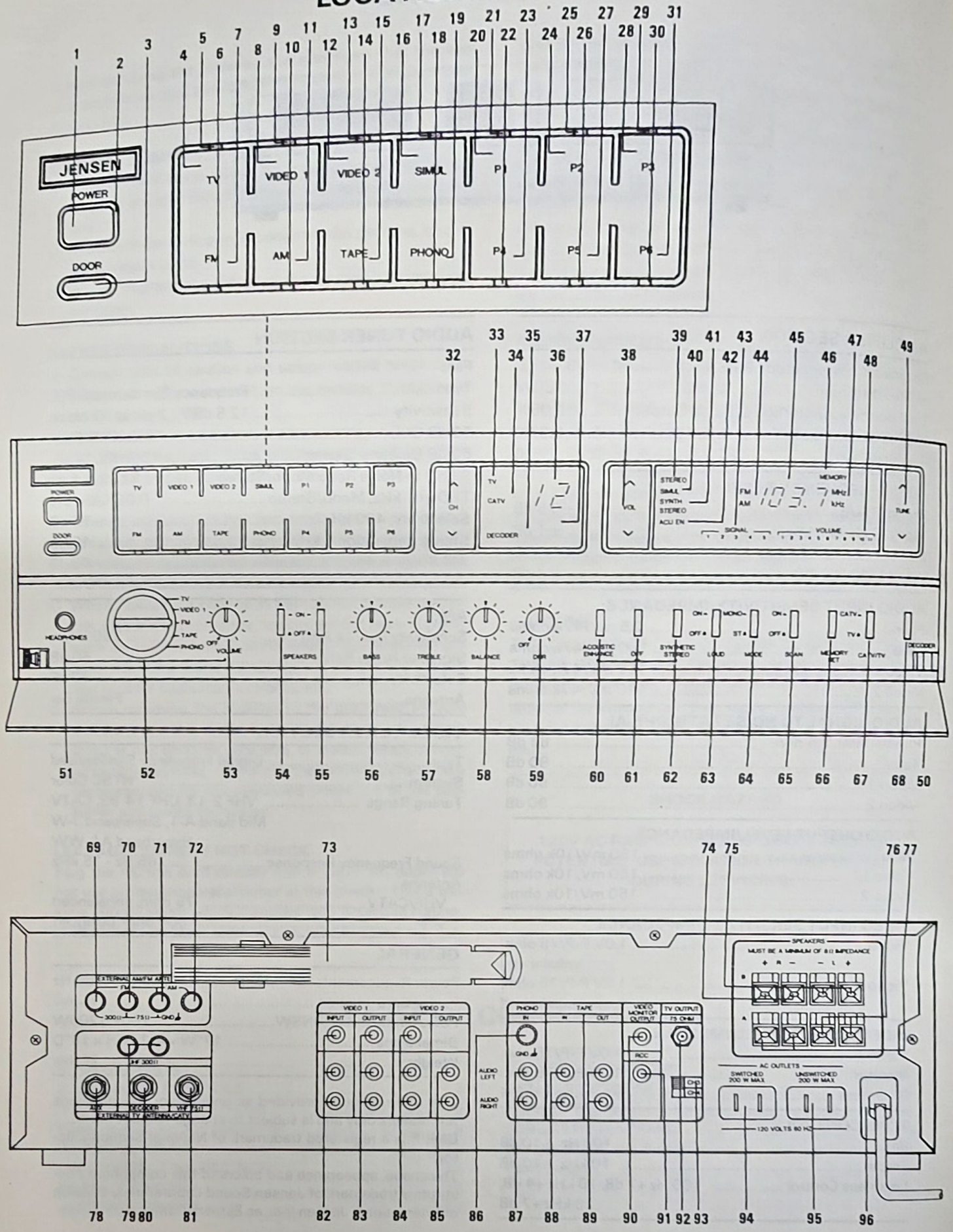

Function Main

1. POWER button
2. Power indicator light
3. DOOR button
4. TV button
5. TV indicator light
6. FM indicator light
7. FM button
8. VIDEO 1 button
9. VIDEO 1 indicator light
10. AM indicator light
11. AM button
12. VIDEO 2 button
13. VIDEO 2 indicator light
14. TAPE indicator light
15. TAPE button
16. SIMUL button
17. SIMUL indicator light
18. PHONO indicator light
19. PHONO button
20. P1 button
21. P1 indicator light
22. P4 indicator light
23. P4 button
24. P2 button
25. P2 indicator light
26. P5 indicator light
27. P5 button
28. P3 button
29. P3 indicator light
30. P6 indicator light
31. P6 button
32. CHANNEL button
33. TV display light
34. CATV display light
35. DECODER display light
36. CHANNEL number
37. Remote sensor
38. VOLUME button
39. STEREO display light
40. SIMUL display light
41. SYNTH STEREO display light
42. ACU EN display light
43. SIGNAL indicator light
44. FM/AM display light
45. Radio station number
46. MEMORY indicator light
47. MHz–KHz indicator
48. VOLUME indicator light
49. TUNE button
50. Control panel door
51. HEADPHONES jack
52. HEADPHONES MODE SELECTOR switch
53. HEADPHONES VOLUME button
54. SPEAKERS A button
55. SPEAKERS B button
56. BASS control
57. TREBLE control
58. BALANCE control
59. DNR control
60. ACOUSTIC ENHANCE button
61. OFF button
62. SYNTHETIC STEREO button
63. LOUD button
64. MODE button
65. SCAN button
66. MEMORY SET button
67. CATV/TV button
68. DECODER button
69. FM 300 ohm terminal
70. FM 300-75 ohm terminal
71. FM 75 ohm terminal
72. AM antenna terminal
73. AM antenna
74. Speaker B right terminals
75. Speaker B left terminals
76. Speaker A left terminals
77. Speaker A right terminal
78. AUX antenna terminal
79. UHF 300 ohm terminals
80. DECODER terminal
81. VHF 75 ohm terminal
82. VIDEO 1 INPUT terminals
83. VIDEO 1 OUTPUT terminals
84. VIDEO 2 INPUT terminals
85. VIDEO 2 OUTPUT terminals
86. PHONO GND terminal
87. PHONO IN terminals
88. TAPE IN terminals
89. TAPE OUT terminal
90. VIDEO MONITOR OUTPUT terminal
91. RCC terminal
92. TV OUTPUT terminal
93. CH3, CH4 Switch
94. AC outlet switched
95. AC outlet unswitched
96. AC power cord

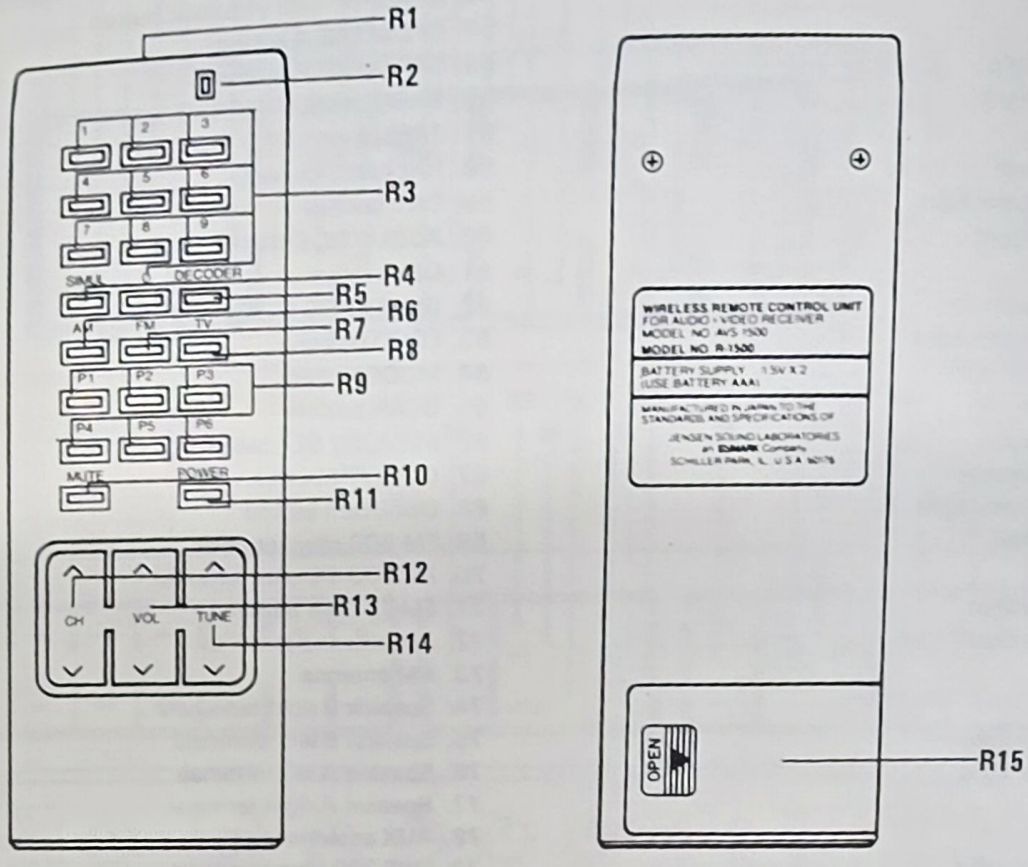

Remote Control

R 1. Infrared transmitting parts
R 2. Indicator light
R 3. CH. Number buttons
R 4. SIMUL button
R 5. DECODER button
R 6. AM button
R 7. FM button
R 8. TV button
R 9. Preset Station buttons
R10. Mute button
R11. Power button
R12. CH. UP/DOWN button
R13. VOL UP/DOWN button
R14. TUNE UP/DOWN button
R15. Battery cover

DESCRIPTION OF CONTROLS

FRONT VIEW (1)

1. POWER button
   Press and release to turn power on. Press again to turn power off. When the power is on the red Power indicator light 2, glows red around the POWER button 1. Power can also be turned on or off using the remote control POWER button – R11. When power comes on, whatever was on when power was turned off (TV channel, AM tuner, etc.) will also be on and at the same setting as when the power was off.
2. Power indicator light
   Lit when power to the AVS-1500 is on.
3. DOOR button
   Press to open lower control panel.
4. TV button
   Press to select the TV. Other things, FM, phonograph, etc. automatically turn off. When on, the TV indicator light 5 will be lit.
5. TV indicator light
   Lit when the TV button 4 is on.
6. FM indicator light
   Lit when FM is selected (input is from the built in FM tuner).
7. FM button
   Press to select FM, (select the built in FM tuner as the source of input).
8. VIDEO 1 button
   Press to select video 1, (select the devices connected to video1 audio and video inputs as the source of input).
9. VIDEO 1 indicator light
   Lit when video 1 is on, (input is from video 1 inputs).
10. AM indicator light
    Lit when AM is on, (input is from the built in AM tuner).
11. AM button
    Press to select AM, (select the built-in AM tuner as the source of audio input).
12. VIDEO 2 button
    Press to select video 2, (select the devices connected to video 2 audio and video inputs as the source of input).
13. VIDEO 2 indicator light
    Lit when video 2 is on, (input is from video 2 inputs).
14. Tape indicator light
    Lit when tape is on, (input is from tape audio inputs).
15. TAPE button
    Press to select tape, (select audio input from device connected to tape audio inputs).
16. SIMUL button
    Press to select both the TV and the FM, (select video input from the built-in TV tuner, and audio input from the built in FM tuner). Use for simulcasts, when a TV station and an FM station broadcast the same program simultaneously. The video comes from the TV broadcast and the audio comes from the stereo FM broadcast. (Works the same as SIMUL button R4.)
17. SIMUL indicator light
    Lit when SIMUL is on, (audio input is from the built in FM tuner, and video input is from the built in TV tuner). SIMUL display light 40 will be lit.
18. PHONO indicator light
    Lit when phono is on, (audio input is from the PHONO in terminal 87).
19. PHONO button
    Press to select phonograph, (select audio input from the PHONO IN terminals 87).
20. P1 button
    Press to select FM or AM station stored in memory location P1.
21. P1 indicator light
    Lit when FM or AM station P1 is on.
22. P4 indicator light
    Lit when FM or AM station P4 is on.
23. P4 button
    Press to select FM or AM station stored in memory location P4.
24. P2 button
    Press to select FM or AM station stored in memory location P2.
25. P2 indicator light
    Lit when FM or AM station P2 is on.
26. P5 indicator light
    Lit when FM or AM station P5 is on.
27. P5 button
    Press to select FM or AM station stored in memory location P5.
28. P3 button
    Press to select FM or AM station stored in memory location P3.
29. P3 indicator light
    Lit when FM or AM station P3 is on.
30. P6 indicator light
    Lit when FM or AM station P6 is on.
31. P6 button
    Press to select FM or AM station stored in memory location P6.
32. CH button
    Press to change the TV channel. Press top (∧) to change to a higher channel number. Press bottom (∨) to change to a lower channel number. Press and release to change one number at a time. Press and hold to change channels rapidly.
33. TV display light
    Lit when CATV/TV button 67 is in up position.
34. CATV display light
    Lit when CATV/TV button 67 is in down position.
35. DECODER display light
    Lit when decoder is on, (adjusts antenna connections for some CATV applications). Press and release DECODER button 68 to turn decoder on or off.
36. Channel number
    TV channel number is displayed here.
37. Remote sensor
    Receiving window for infrared signals from the remote control unit.
38. VOL button
    Press to change the volume. Press and hold top (∧) of button to make it louder. Press and hold bottom (∨) of button to make it more quiet. As the sound gets louder more of the green Volume indicator lights 48 are lit.
39. STEREO display light
    Lit when the FM station is broadcasting in stereo.
40. SIMUL display light
    Lit when SIMUL is on, (audio input is from the built in FM tuner, and video input is from the bult in TV tuner). SIMUL indicator light 17 will also be lit.
41. SYNTH STEREO display light
    Lit when SYNTHETIC STEREO button 62 is in down position. When lit makes mono audio sound like stereo.
42. ACU EN display light
    Lit when ACOUSTIC ENHANCE button 60 is in down position. Acoustic enhance electronics enhance the sound.
43. SIGNAL indicator lights
    The stronger the FM or AM signal, the more red lights are lit.
44. FM/AM display light
    FM or AM is lit to show which radio band is selected.

45. Radio station number
The FM or AM radio station number is lit. In FM the numbers go from 87.9 MHz to 107.9 MHz in odd steps of 0.2 MHz. In AM the numbers go from 530 kHz to 1620 kHz in steps of 10 kHz.

46. MEMORY display light
Lit when MEMORY SET button 66 is pressed. Stays lit for about 5 seconds. While lit press any P button, on unit or remote, to store an FM or AM station in memory.

47. MHz or kHz is lit to indicate FM band MHz, or AM band kHz.

48. VOLUME indicator lights
The louder the volume the more lights are lit.

49. TUNE button
Press to change the FM orAM station. Press the top (∧) of the button to change to a higher station number. Press the bottom (∨) of the button to change to a lower station number. Press and release to change one step at a time. Press and hold to change station numbers quickly. FM changes in odd steps of 0.2 MHz AM changes in steps of 10 kHz.

50. Control panel door
Press DOOR button 3 to open for access to lower controls. Close when not adjusting controls.

FRONT VIEW (2)

51. HEADPHONES jack
Plug stereo headphones in here. Use headphones with a 1/4" stereo phone plug.

52. HEADPHONE MODE SELECTOR switch
Turn to select TV, VIDEO 1, FM, TAPE or PHONO audio input to the headphones. Headphones have a separate tuner, you can listen to a different audio source on the headphones than the main tuner of the AVS-1500.

53. HEADPHONE VOLUME button
Turn to turn on headphones and to adjust headphone volume. You can make the button pop out for easier turning, by pushing in and releasing it. Be sure to push in again and release to shorten the button so it dosen't hit the closed control panel door.

54. SPEAKER A button
Press and release to switch to or from ON (in position) to OFF (out position). When ON speakers connected to "A" speaker terminals will be on. (No sound is heard if SPEAKERS A button 54 and SPEAKERS B button 55 are both on but only one set of speakers (A or B) is connected.)

55. SPEAKERS B button
Press and release to switch to or from ON, in position to OFF, out position. When ON speakers connected to "B" speaker terminals will be on. (No sound is heard if SPEAKERS A button 54 and SPEAKERS B button 55 are both on but onlyone set of speakers (A or B) is connected.)

56. BASS control
Turn to adjust bass tones. You can make the button pop out for easier turning, by pushing in and releasing it. Be sure to push in again and release to shorten the button so it doesn't hit the closed control panel door.

57. TREBLE control
Turn to adjust treble tones. You can make the button pop out for easier turning, by pushing in and releasing it. Be sure to push in again and release to shorten the button so it doesn't hit the closed control panel door.

58. BALANCE control
Turn to adjust speaker balance. Adjust so the right speaker(s) sound as loud as the left speaker(s). You can make the button pop out for easier turning, by pushing in and releasing it. Be sure to push in again and release to shorten the button so it doesn't hit the closed control panel door.

59. DNR control•
Turn to turn on and adjust Dynamic Noise Reduction (DNR). DNR reduces tape hiss and other undesired sounds you may notice with better speakers. You can make the button pop out for easier turning, by pushing in and releasing it. Be sure to push in again and release to shorten the button so it doesn't hit the closed control panel door.

60. ACOUSTIC ENHANCE button
Press in to get enhanced audio, sound as in a concert hall. When on ACU EN display light 42 will be lit. To turn off press OFF 61 or SYNTHETIC STEREO 62.

61. OFF button
Press to turn off ACOUSTIC ENHANCE 60 or SYNTHETIC STEREO 62.

62. SYNTHETIC STEREO button
Press to turn synthetic stereo on. SYNTH STEREO display light 41 will be lit. Makes mono audio sound like stereo.

63. LOUD button
Press and release for LOUD. LOUD changes high and low frequencies. It makes low volume recordings easier to understand, so they seem louder. Some people like the sound of LOUD at all volume levels. In the IN position LOUD is on. In the OUT position LOUD is off.

64. MODE button
Press to choose between MONO and STEREO. At STEREO (out position) left and right audio signals go to left and right speakers. At MONO (in position) sound is blended to both left and right speakers.

65. SCAN button
When SCAN button 65 is on (in position) press and release TUNE button 49 and CH button 32; tuner will stop at the next strong signal. When SCAN button 65 is off (out position) press and release Tune button 49 to step 0.2 MHz in FM or 10 kHz in AM.

66. MEMORY SET button
Press TUNE button 49 to select an FM or AM radio station. Press MEMORY SET button 66. MEMORY display light 46 will light up for about 5 seconds. While lit press one of the P1 to P6 buttons to store that station frequency in the P button. You can store up to 6 FM and 6 AM frequencies.

67. CATV/TV button
When in TV (out) position TV display light 33 is lit.
When in CATV (in) position 78. CATV display light 34 is lit.

68. DECODER button
Press to adjust antenna connections for some CATV applications. When on, DECODER display light 35 is lit. When decoder is on, antenna connected to VHF 75 ohm terminal 87 is available at DECODER terminal 80 and the antenna input to the AVS-1500 is from the AUX antenna terminal 78. Use depends on your cable/decoder requirements. See DECODER terminal 80. (Works the same as DECODER button R5.)

69. FM 300 ohm terminal
Connect 300 ohm (twin lead) FM antenna to this terminal and to FM 300-75 ohm terminal 70.

70. FM 300-75 ohm terminal
Connect 300 ohm (twin lead)FM antenna to this terminal and to FM 300 ohm terminal 69.
Connect center wire of 75 ohm (coaxial cable) FM antenna to this terminal and sheath of 75 ohm (coaxial cable) to FM 75 ohm terminal 71.

71. FM 75 ohm terminal
Connect outside sheath (conductor) of 75 ohm coaxial cable FM antenna lead to this terminal. Connect center conductor of 75 ohm coaxial cable FM antenna lead to FM 300-75ohm terminal 70.
Connect ground of external AM antenna to this terminal.

REAR VIEW

72. AM antenna terminal
    Connect other lead of AM antenna to this terminal. (Note there is a built in AM antenna 73, connections 71 and 72 are for outside AM antenna connection.)
73. AM antenna
    This AM antenna is already connected. The antenna is adjustable forbetter reception. It will swing out from the back of the receiver horizontally to a bit past straight out.
74. Speaker B right (+ and –) terminals
    Connect right speaker of stereo pair B to these terminals.
75. Speaker B left (+ and –) terminals
    Connect left speaker of stereo pair B to these terminals.
76. Speaker A left (+ and –) terminals
    Connect left speaker of stereo pair A to these terminals.
77. Speaker A right(+ and –)
    Connect right speaker of stereo pair A to these terminals.
78. AUX antenna terminal
    Connect auxiliary VHF antenna here. Use 75 ohm coaxial cable with standard "F" connectors.
79. UHF 300 ohm terminals
    Connect UHF antenna here. Use 300 ohm, twin lead. (If your antenna is a combined VHF UHF antenna with 75 ohm coaxial cable, you will need to buy a video balun and signal splitter. See your electronics dealer.)
80. DECODER terminal
    Use to connect AVS-1500 to subscription TV decoder (unscrabler). (If your cable TV input carries regular cable TV channels and a special pay-TV channel that comes over the cable scrambled and needs a special decoder box, connect the cable to VHF 75 ohm terminal 81, connect DECODER terminal 80 to the special decoder box, and connect the cable from the decoder box to AUX antenna terminal 78.)
81. VHF 75 ohm terminal
    Connect your VHF TV antenna here. We recommend an outdoor antenna. Use 75 ohm coaxial cable with standard "F" connectors.
82. VIDEO 1 INPUT terminals
    Connect stereo videocassette or other video device to VIDEO 1 INPUT terminals 82 and VIDEO 1 OUTPUT terminals 83. Connect top(yellow) input terminal to video output of the video device. Use 75 ohm coaxial cable with US pin plug (RCA plug) connectors. Connect middle (white) input terminals to audio left output of the video device. Connect bottom (red) input terminal to audio right output of the video device. For audio connections use shielded audio cable with US pin plug (RCA plug) connectors.
83. VIDEO 1 OUTPUT terminals
    Connect stereo videocassette recorder or other video device to VIDEO 1 OUTPUT terminals 83 and VIDEO 1 INPUT terminals 82. Connect top (yellow) output terminal to video input of the video device. Use 75 ohm coaxial cable with US pin plug (RCA plug) connectors. Connect middle (white) output terminal to audio left input of the video device. Connect bottom (red)output terminal to audio right input of the video device. For audio connections use shielded audio cable with US pin plug (RCA plug) connectors.
84. VIDEO 2 INPUT terminals
    Connect stereo videocassette recorder or other video device to VIDEO 2 INPUT terminals 84 and VIDEO 2 OUTPUT terminals 85. Connect top (yellow) input terminal to video output of the video device. Use 75 ohm coaxial cable with US pin plug (RCA plug) connectors. Connect middle (white) input terminal to audio left output of the video device. Connect bottom (red) input terminal to audio right output of the video device. For audio connections use shielded audio cable with US pin plug (RCA plug) connectors.
85. VIDEO 2 OUTPUT terminals
    Connect stereo videocassette recorder or other video device to VIDEO 2 OUTPUT terminals 85 and VIDEO 2 INPUT terminals 84. Connect top (yellow) output terminal to video input of the video device. Use 75 ohm coaxial cable with US pin plug (RCA plug) connectors. Connect middle (white) output terminal to audio left input of the video device. Connect bottom (red) output terminal to audio right input of the video device. For audio connections use shielded audio cable with US pin plug (RCA plug) connectors.
86. PHONO GND terminal
    Connect ground wire (usually green) from your turntable to this terminal.
87. PHONO IN terminals
    Connect top (white, audio left) input terminal to the audio left output of your turntable. Connect bottom (red, audio right) input terminal to the audio right output of your turntable. Use shielded audio cable with US pin plug (RCA plug) connectors.
88. TAPE IN terminals
    Connect top (white, audio left) input terminal to the audio left output (line output) terminal of your tape deck. Connect bottom (red, audio right) input terminal to the audio right output (line output) terminal of your tape deck. Use shielded audio cable with US pinplug (RCA plug) connectors.
89. TAPE OUT terminals
    Connect top (white, audio left) output terminal to the audio left input (line input) terminal of your tape deck. Connect bottom (red, audio right) input terminal to the audio output (line output) terminal of your tape deck. Use shielded audio cable with US pin plug (RCA plug) connectors.
90. VIDEO MONITOR OUTPUT terminal
    Connect to your video monitor video input terminal. Use 75 ohm coaxial cable with US pin plug (RCA plug) connectors.
91. RCC terminal
    Connect RCC (remote control connector) to the RCC connection of your video monitor. (The AVS-1500 will automatically turn the monitor on when VIDEO 1, VIDEO 2, SIMUL or TV are selected.)
92. TV OUTPUT terminal
    Connect to VHF antenna connection of your TV receiver. Use 75 ohm coaxial cable supplied.
93. CH3, CH4 switch
    This switch changes the output of TV OUTPUT terminal 92 between channels 3 and 4 (YOUR VIDEO CHANNEL). Use whichever channel is not being used for broadcast in your area to avoid interfering signals.
94. AC outlet switched.
    120 volts 60 Hz AC is available here. Maximum capacity is 200 watts. Power to this outlet is switched on and off by POWER button 1 and POWER button R11.
95. AC outlet unswitched.
    120 volts 60 Hz AC is available here. Maximum capacity is 200 watts.
96. AC POWER
    Plug in to 120 volts AC 60 Hz power. Power consumption of the AVS-1500 is 120 watts, plus two convenience outlets of 200 watts maximum each for a maximum total of 520 watts. The AC power cord has a polarized plug. One blade of the plug is wider than the other so it can plug into an outlet only one way. If it won't fit into the outlet, turn the plug over. If it still won't fit, have an electrician replace the obsolete outlet. If you use an extension cord be sure the extension cord has both a polarized plug and a polarized socket. Don't try to defeat this safety feature.

*DNR is a registered trademark of National Semiconductor Corp.

CATV Channel Number

Picture Carrier, Sound Carrier and Local OSC Frequencies and Assigned Channels.

US & CANADA

SYSTEM: M

PICTURE IF . . . 45.75 MHz (= fL – fP)

CHANNEL No.	PICTURE CARRIER fp (MHz)	SOUND CARRIER fs (MHz)	LOCAL OSC fu (MHz)
A-2	55.25	59.75	101
A-3	61.25	65.75	107
A-4	67.25	71.75	113
A-5	77.25	81.75	123
A-6	83.25	87.75	129
A-7	175.25	179.75	221
A-8	181.25	185.75	227
A-9	187.25	191.75	233
A-10	193.25	197.75	239
A-11	199.25	203.75	245
A-12	205.25	209.75	251
A-13	211.25	215.75	257
A-14	471.25	475.75	517
A-15	477.25	481.75	523
A-16	483.25	487.75	529
A-17	489.25	493.75	535
A-18	495.25	499.75	541
A-19	501.25	505.75	547
A-20	507.25	511.75	553
A-21	513.25	517.75	559
A-22	519.25	523.75	565
A-23	525.25	529.75	571
A-24	531.25	535.75	577
A-25	537.25	541.75	583
A-26	543.25	547.75	589
A-27	549.25	553.75	595
A-28	555.25	559.75	601
A-29	561.25	565.75	607
A-30	567.25	571.75	613
A-31	573.25	577.75	619
A-32	579.25	583.75	625
A-33	585.25	589.75	631
A-34	591.25	595.75	637
A-35	597.25	601.75	643
A-36	603.25	607.75	649
A-37	609.25	613.75	655
A-38	615.25	619.75	661
A-39	621.25	625.75	667
A-40	627.25	631.75	673
A-41	633.25	637.75	679
A-42	639.25	643.75	685

CHANNEL No.	PICTURE CARRIER fp (MHz)	SOUND CARRIER fs (MHz)	LOCAL OSC fu (MHz)
A-43	645.25	649.75	691
A-44	651.25	655.75	697
A-45	657.25	661.75	703
A-46	663.25	667.75	709
A-47	669.25	673.75	715
A-48	675.25	679.75	721
A-49	681.25	685.75	727
A-50	687.25	691.75	733
A-51	693.25	697.75	739
A-52	699.25	703.75	745
A-53	705.25	709.75	751
A-54	711.25	715.75	757
A-55	717.25	721.75	763
A-56	723.25	727.75	769
A-57	729.25	733.75	775
A-58	737.25	739.75	781
A-59	741.25	745.75	787
A-60	747.25	751.75	793
A-61	753.25	757.75	799
A-62	759.25	763.75	805
A-63	765.25	769.75	811
A-64	771.25	775.75	817
A-65	777.25	781.75	823
A-66	783.25	787.75	829
A-67	789.25	793.75	835
A-68	795.25	799.75	841
A-69	801.25	805.75	847
A-70	807.25	811.75	853
A-71	813.25	817.75	859
A-72	819.25	823.75	865
A-73	825.25	829.75	871
A-74	831.25	835.75	877
A-75	837.25	841.75	883
A-76	843.25	847.75	889
A-77	849.25	853.75	895
A-78	855.25	859.75	901
A-79	861.25	865.75	907
A-80	867.25	871.75	913
A-81	873.25	877.75	919
A-82	879.25	883.75	925
A-83	885.25	889.75	931

CHANNEL No.	PICTURE CARRIER fp (MHz)	SOUND CARRIER fs (MHz)	LOCAL OSC fu (MHz)
MID BAND (CATV)			
A-5(60)	91.25	95.75	137
A-4(61)	97.25	101.75	143
A-3(62)	103.25	107.75	149
A-2(63)	109.25	113.75	155
A-1(64)	115.25	119.75	161
A(14)	121.25	125.75	167
B(15)	127.25	131.75	173
C(16)	133.25	137.75	179
D(17)	139.25	143.75	185
E(18)	145.25	149.75	191
F(19)	151.25	155.75	197
G(20)	157.25	161.75	203
H(21)	163.25	167.75	209
I(22)	169.25	173.75	215
SUPER BAND (CATV)			
J(23)	217.25	221.75	263
K(24)	223.25	227.75	269
L(25)	229.25	233.75	275
M(26)	235.25	239.75	281
N(27)	241.25	245.75	287
O(28)	247.25	251.75	293
P(29)	253.25	257.75	299
Q(30)	259.25	263.75	305
R(31)	265.25	269.75	311
S(32)	271.25	275.75	317
T(33)	277.25	281.75	323
U(34)	283.25	287.75	329
V(35)	289.25	293.75	335
W(36)	295.25	299.75	341
HYPER BAND (CATV)			
AA(37)	301.25	305.75	347
BB(38)	307.25	311.75	353
CC(39)	313.25	317.75	359
DD(40)	319.25	323.75	365

CHANNEL No.	PICTURE CARRIER fp (MHz)	SOUND CARRIER fs (MHz)	LOCAL OSC fu (MHz)
EE(41)	325.25	329.75	371
FF(42)	331.25	335.75	377
GG(43)	337.25	341.75	383
HH(44)	343.25	347.75	389
II(45)	349.25	353.75	395
JJ(46)	355.25	359.75	401
KK(47)	361.25	365.75	407
LL(48)	367.25	371.75	413
MM(49)	373.25	377.75	419
NN(50)	379.25	383.75	425
OO(51)	385.25	389.75	431
PP(52)	391.25	395.75	437
QQ(53)	397.25	401.75	443
RR(54)	403.25	407.75	449
SS(55)	409.25	413.75	455
TT(56)	415.25	419.75	461
UU(57)	421.25	425.75	467
VV(58)	427.25	431.75	473
WW(59)	433.25	437.75	479

FUNCTIONAL BLOCK DIAGRAM

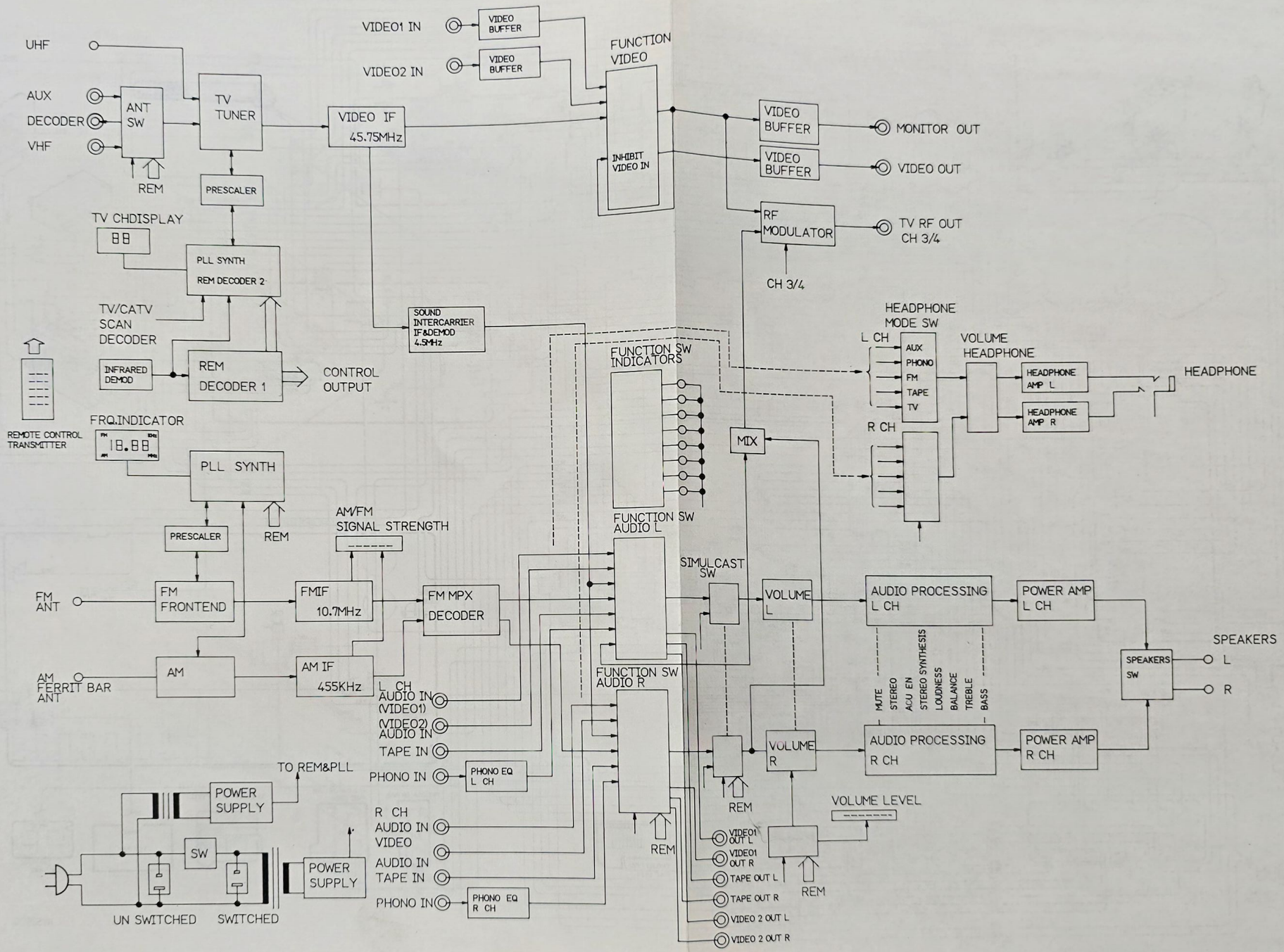

WIRING DIAGRAM

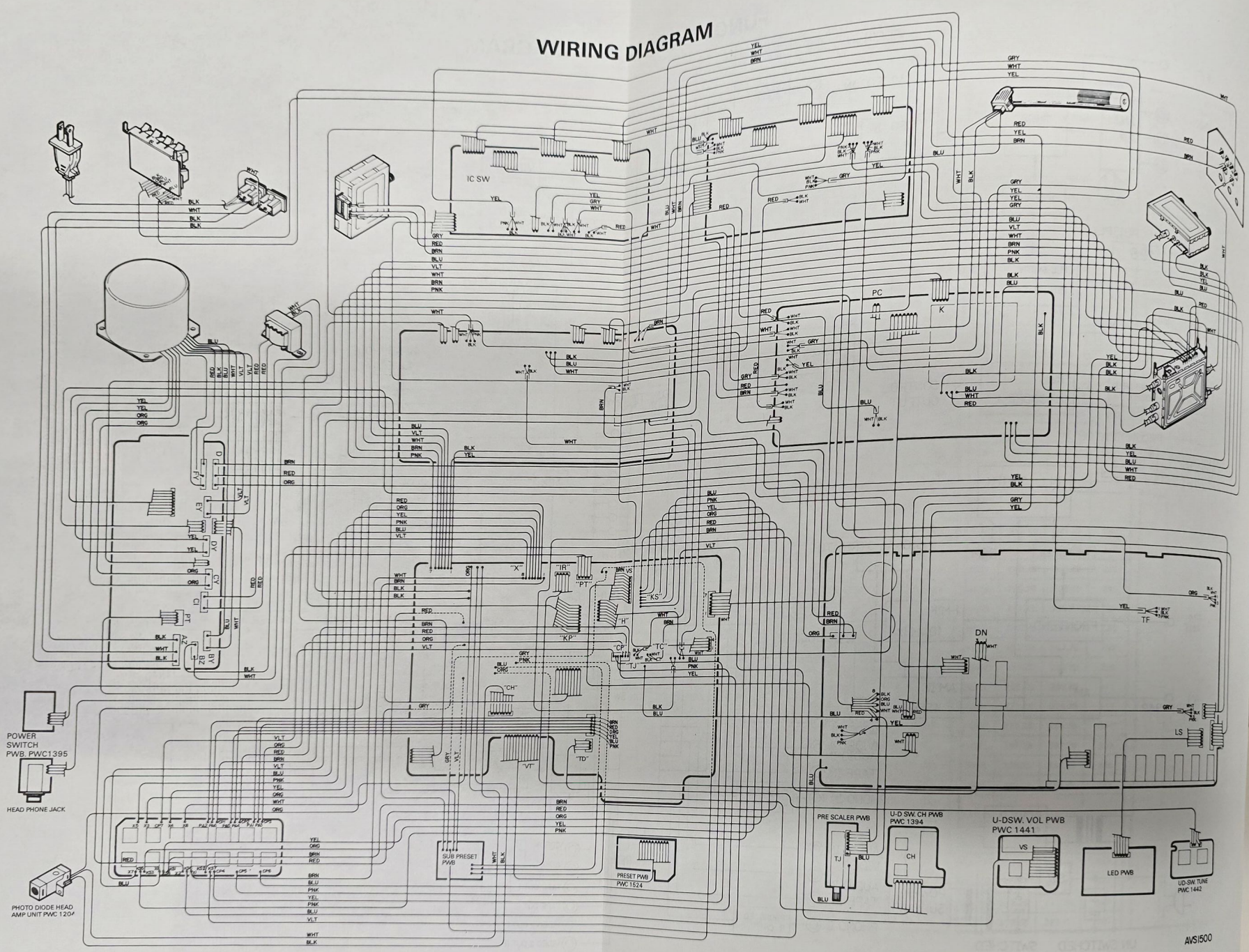

AVS1500

DISASSEMBLY INSTRUCTION

Cabinet Cover Removal

1. Remove cabinet cover mounting screws.
2. Cabinet cover can be pulled up.

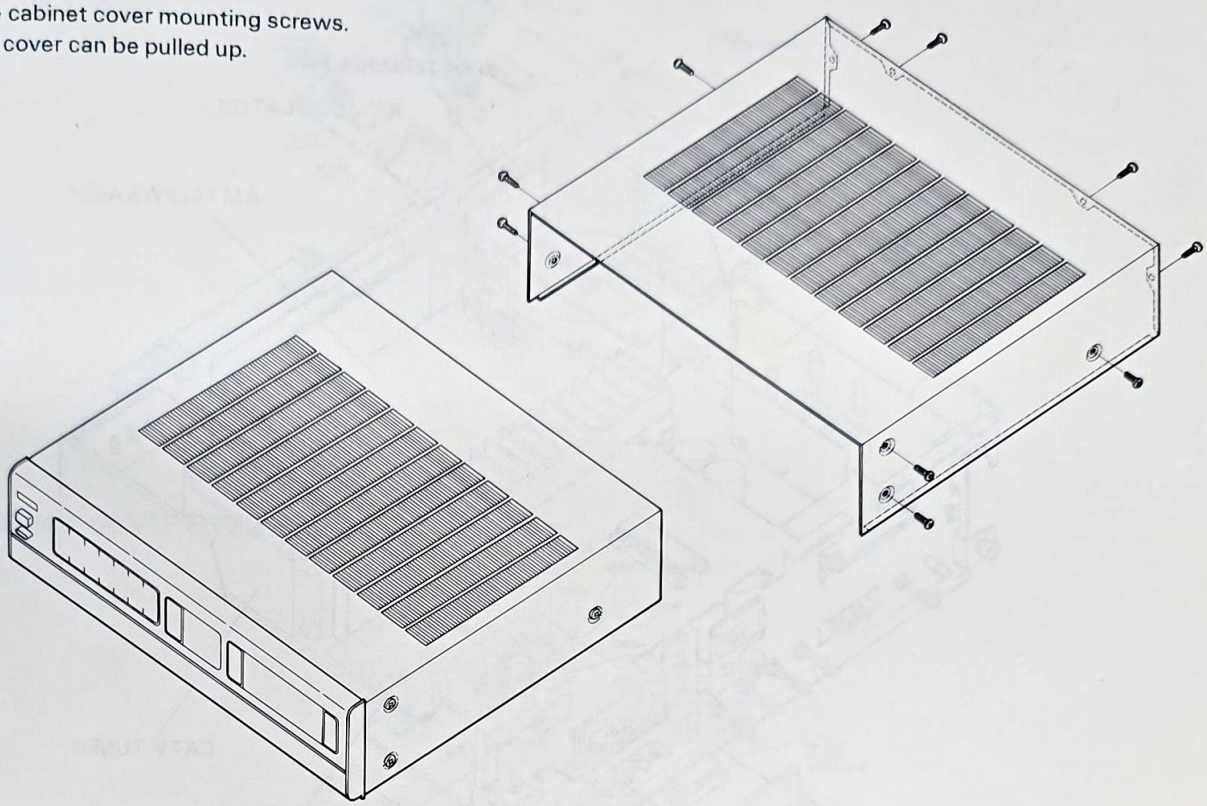

Front Panel Removal

1. Remove cabinet cover, then remove Front Panel mounting screws.
2. Front panel can be pulled.

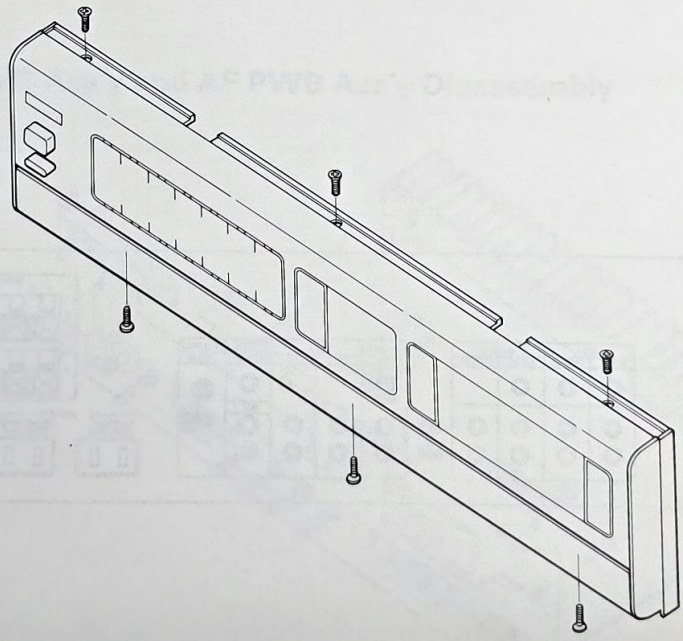

PARTS LOCATION

Front View

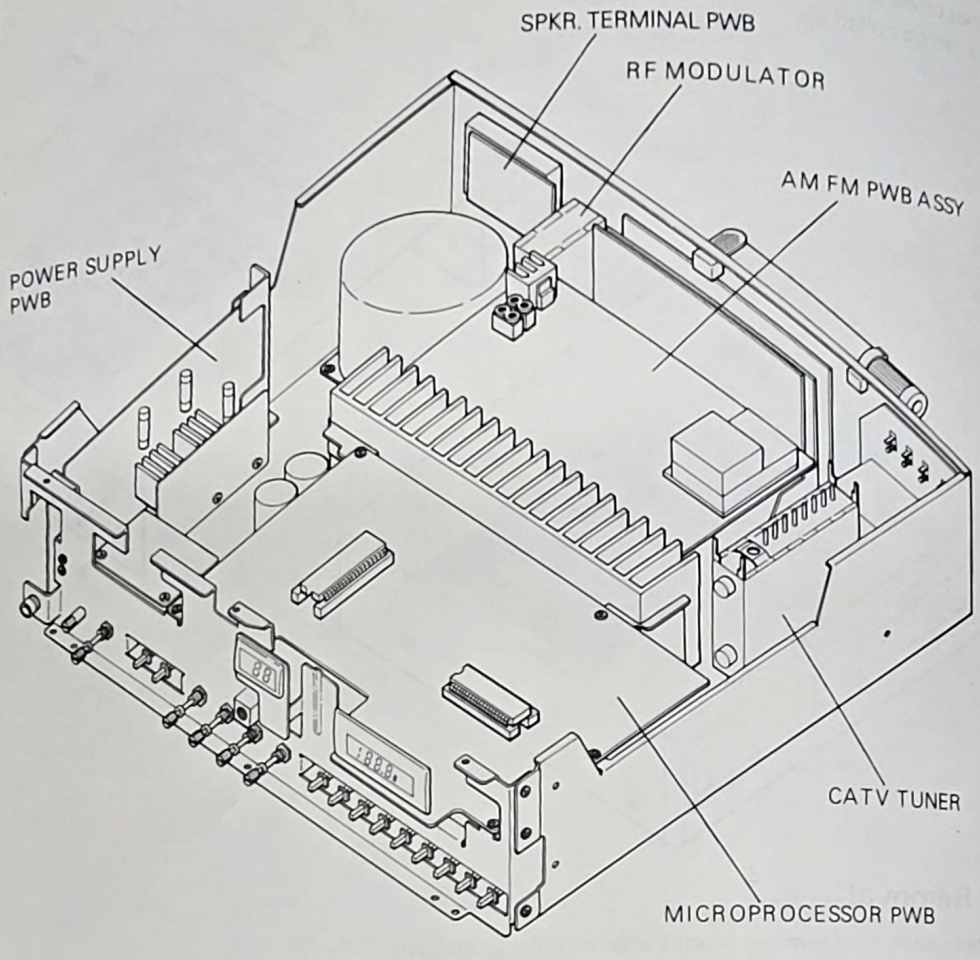

Rear View

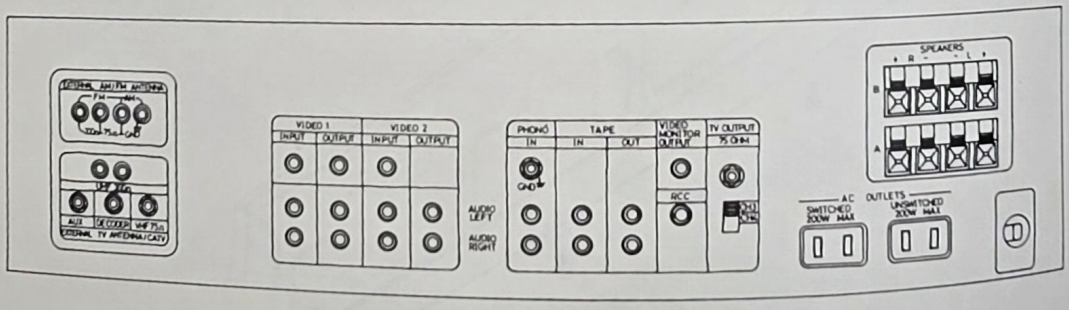

Parts Location of Tuner PWB Ass'y

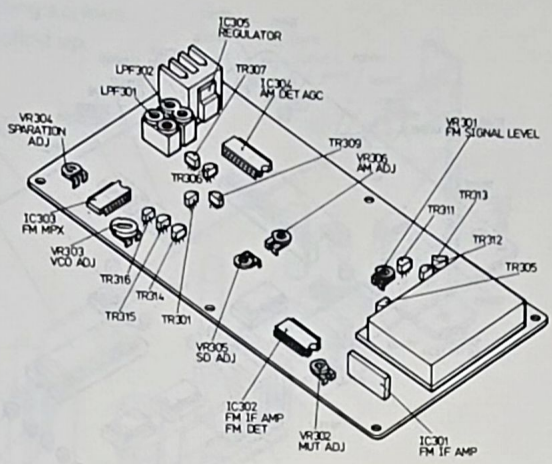

Parts Location of VIF PWB Ass'y

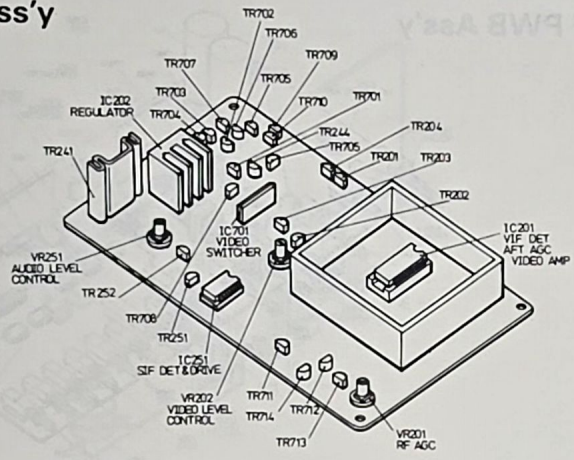

Micro Process PWB Ass'y and AF PWB Ass'y Disassembly

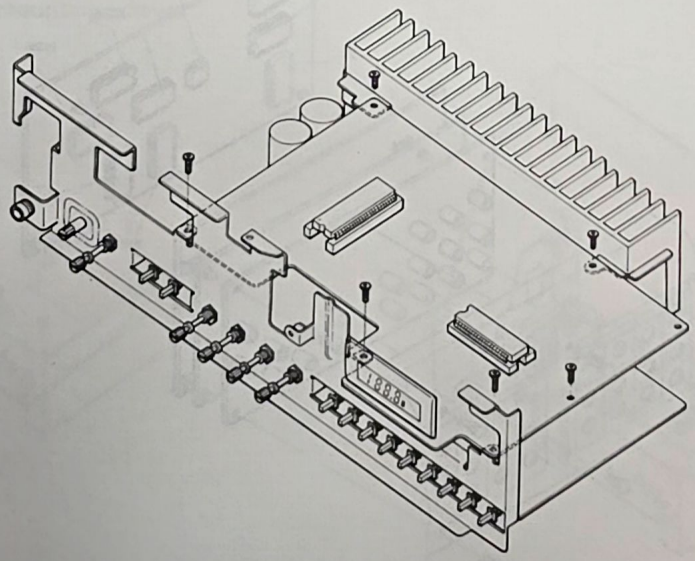

Parts Location of Micro Process PWB Ass'y

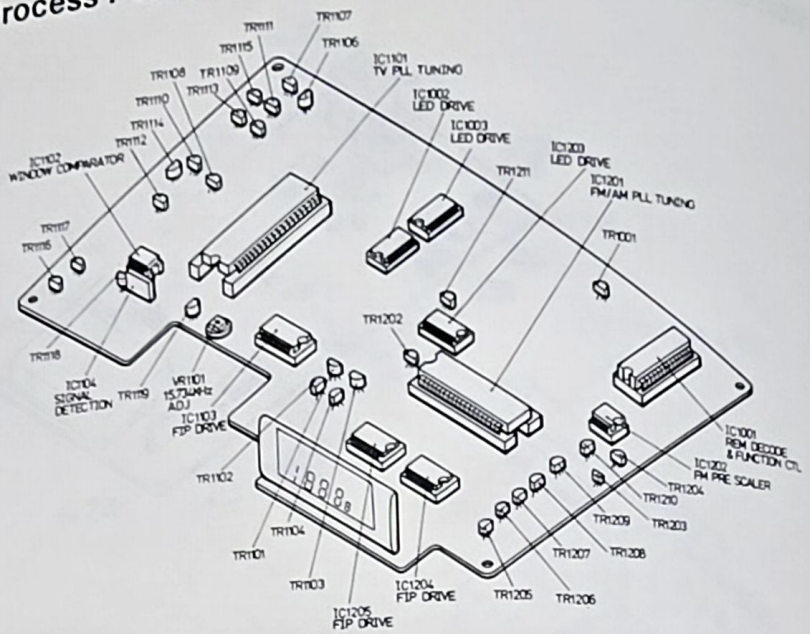

Parts Location of AF PWB Ass'y

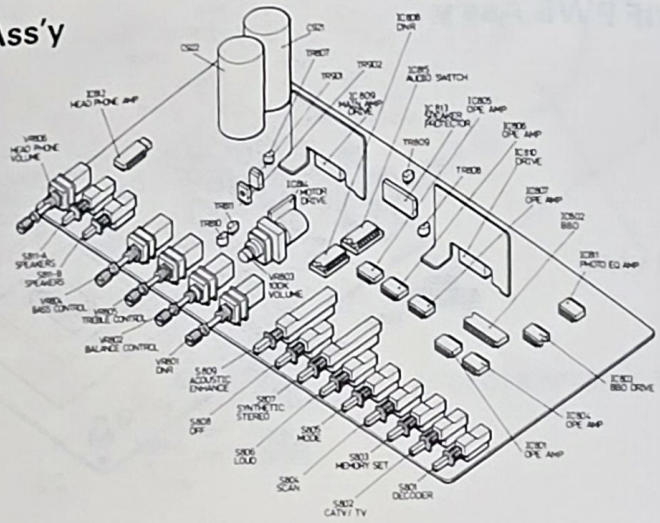

IC SW PWB Ass'y Disassembly

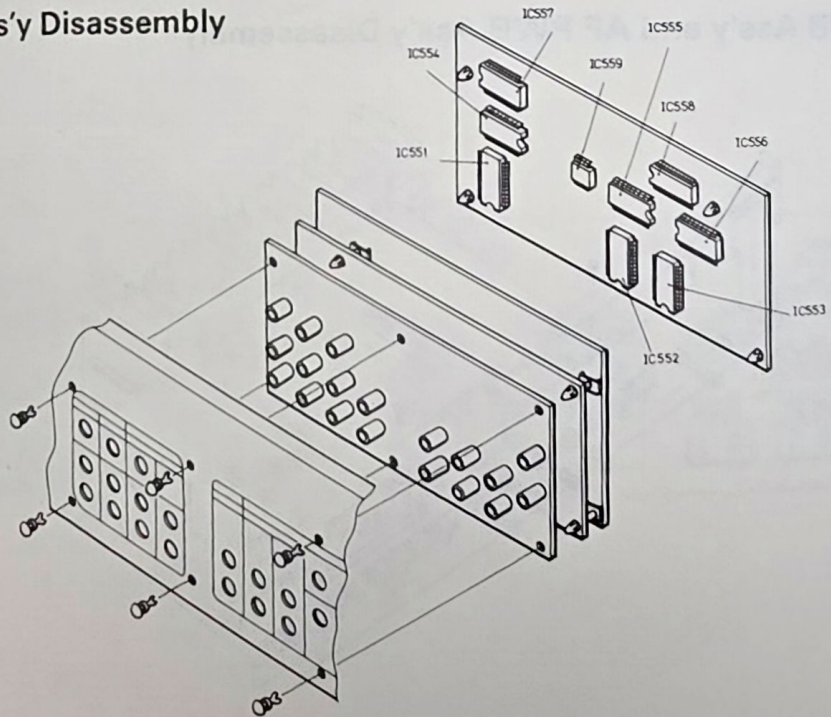

Power Supply PWB Disassembly

1. Remove Power Supply PWB mounting screws.
2. Power Supply PWB Ass'y can be pulled up.

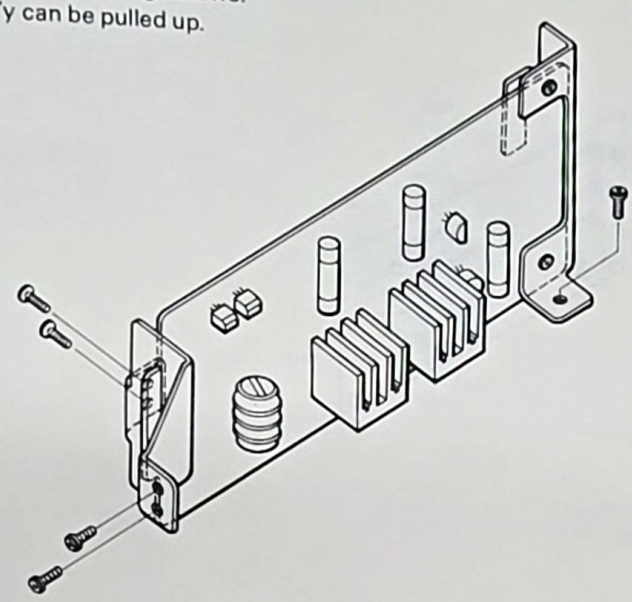

Parts Locations

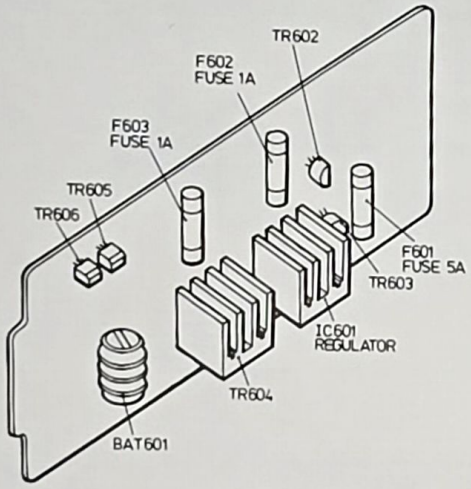

Tuner PWB Ass'y and VIF PWB Ass'y Disassembly

1. Remove Tuner PWB Ass'y mounting screws.

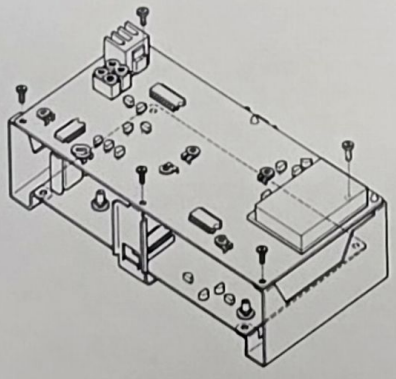

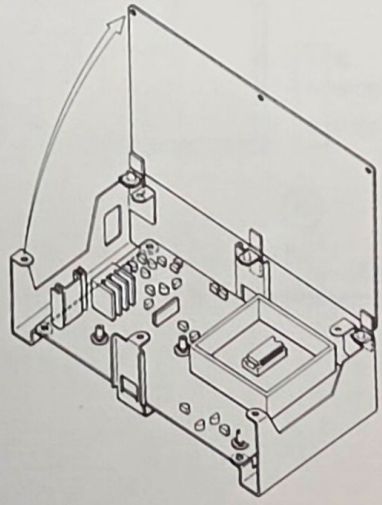

Parts Location of IC SW PWB Ass'y

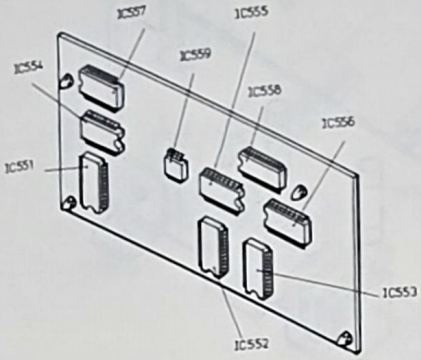

ALIGNMENT PROCEDURE

1. V.I.F. Section

A. Required Test Equipment

1. RF Signal Generator
2. Oscilloscope
3. DC Voltmeter (input impedance $>10\ M\Omega$)
4. Variable resistor for AGC Control
5. Mixing Pad
6. TV Pattern Generator

B. Connection Diagram

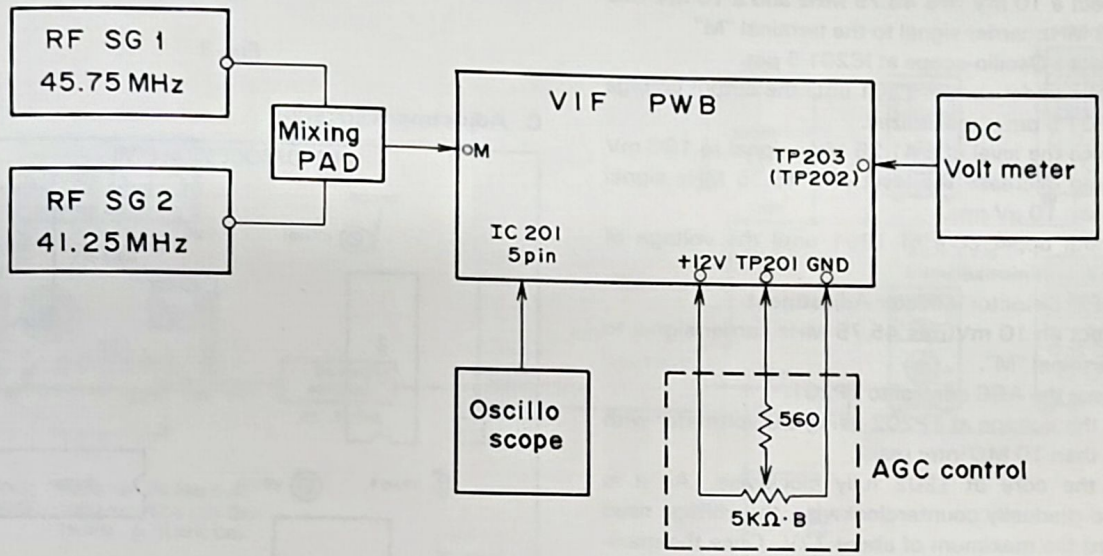

Fig. 1

C. Adjustment Location

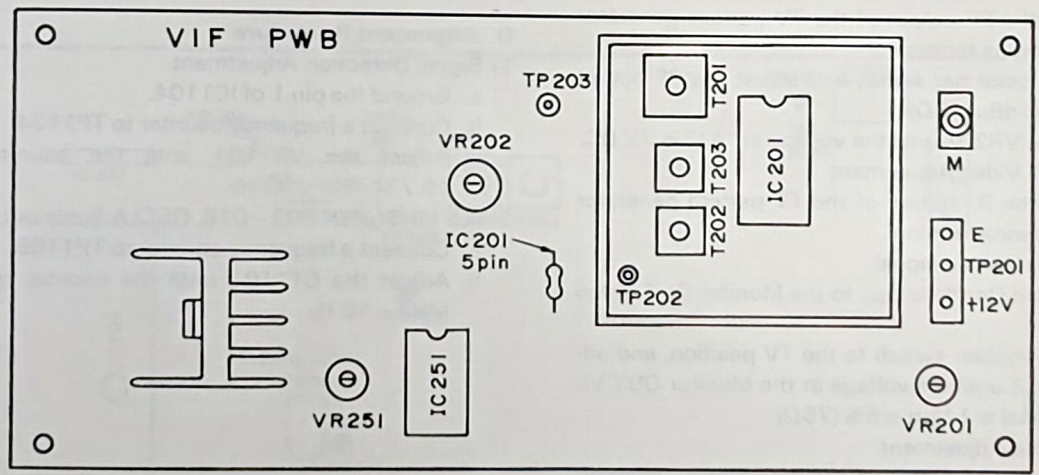

Fig. 2

D. Alignment Procedure

1) T203 (45.75 MHz) Inductor Adjustment
   a. Connect the AGC Control shown in Fig. 1 to TP201 on the VIF PWB.
   b. Connect a 10 mV rms 45.75 MHz carrier signal to the VIF input terminal "M".
   c. Adjust the AGC control until the output voltage of TP203 is nearly 8V DC.
   d. Turn the core of T203 until the voltage of TP203 is maximized.
   e. If the voltage at TP203 exceeds 2V DC, repeat steps c and d.
2. T201 (41.25 MHz) Trap Inductor Adjustment
   a. Connect a 10 mV rms 45.75 MHz and a 10 mV rms 41.25 MHz carrier signal to the terminal "M".
   b. Connect a Oscillo-scope at IC201 5 pin.
   c. Turn the under core of T201 until the output voltage of IC201 5 pin is maximized.
   d. Increase the level of a 41.25 MHz signal to 100 mV rms and decrease the level of a 45.75 MHz signal less than 10 μV rms.
   e. Turn the upper core of T201 until the voltage of TP203 is minimized.
3. T202 (AFT) Detector Inductor Adjustment
   a. Connect an 10 mV rms 45.75 MHz carrier signal to the terminal "M".
   b. Connect the AGC control to TP201.
   c. Read the voltage at TP202 using DC voltmeter with more than 10 MΩ inter resist.
   d. Turn the core of T202 fully clockwise. As it is turned gradually counterclockwise, the voltage rises toward the maximum of about 12V. Once the maximum is reached, further turning it counterclockwise lower the voltage until the minimum of about 0V is reached. Turning it clockwise and adjust the voltage to 4.5V DC.

4) VR201 (RF AGC) Adjustment
   a. Connect the RF output of the TV pattern generator to the antenna terminal.
   b. Supply a color bar signal, and adjust the RF output level to 60 dBμ (75Ω).
   c. Adjust the VR201 until the voltage at "A1" is 7V DC.

5) Monitor OUT Video Adjustment
   a. Connect the RF output of the TV pattern generator to the antenna terminal.
   b. Supply a color bar signal.
   c. Connect an Oscillo-scope to the Monitor OUT Video terminal.
   d. Set the Function switch to the TV position, and adjust VR202 until the voltage at the Monitor OUT Video terminal is 1 Vpp $\pm$5% (75Ω).

6) TV OUT Audio Adjustment
   a. Connect the RF output of the TV pattern generator to the antenna terminal.
   b. Supply a color bar signal, and adjust the sound modulation level to 100%.
   c. Set the Function switch to the TV position and adjust VR251 until the voltage at "01" is 1.4 Vpp $\pm$5%.

2. Micro Processor Section

A. Required Test Equipments

1. Frequency counter

B. Connection Diagram

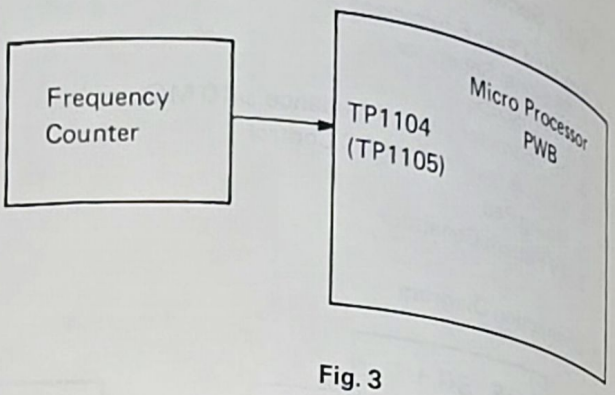

Fig. 3

C. Adjustment Location

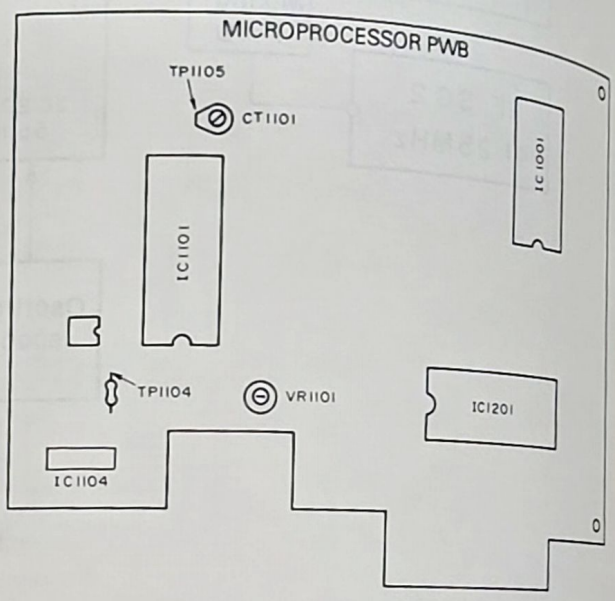

D. Alignment Procedure

1) Signal Detection Adjustment
   a. Ground the pin 1 of IC1104.
   b. Connect a frequency counter to TP1104.
   c. Adjust the VR1101 until the counter reaches 15.734 kHz $\pm$30 Hz.

2) 4.5 MHz (μPD1705 – 016, OSC) Adjustment
   a. Connect a frequency counter to TP1105.
   b. Adjust the CT1101 until the counter reaches 4.5 MHz $\pm$10 Hz.

ALIGNMENT PROCEDURE

1. FM Alignment

A. Required Test Equipment

1. RF signal generator
2. Digital voltmeter
3. Oscilloscope
4. AC voltmeter
5. Distortion meter
6. Stereo modulator

B. Connection Diagram

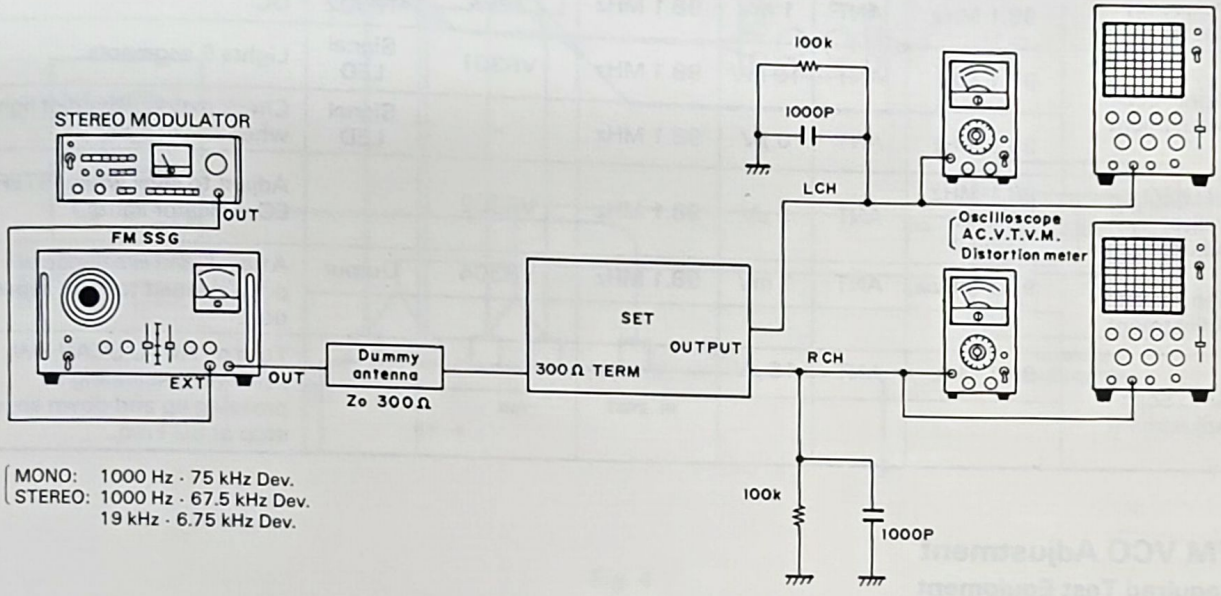

Fig. 1

C. Adjustment Locations

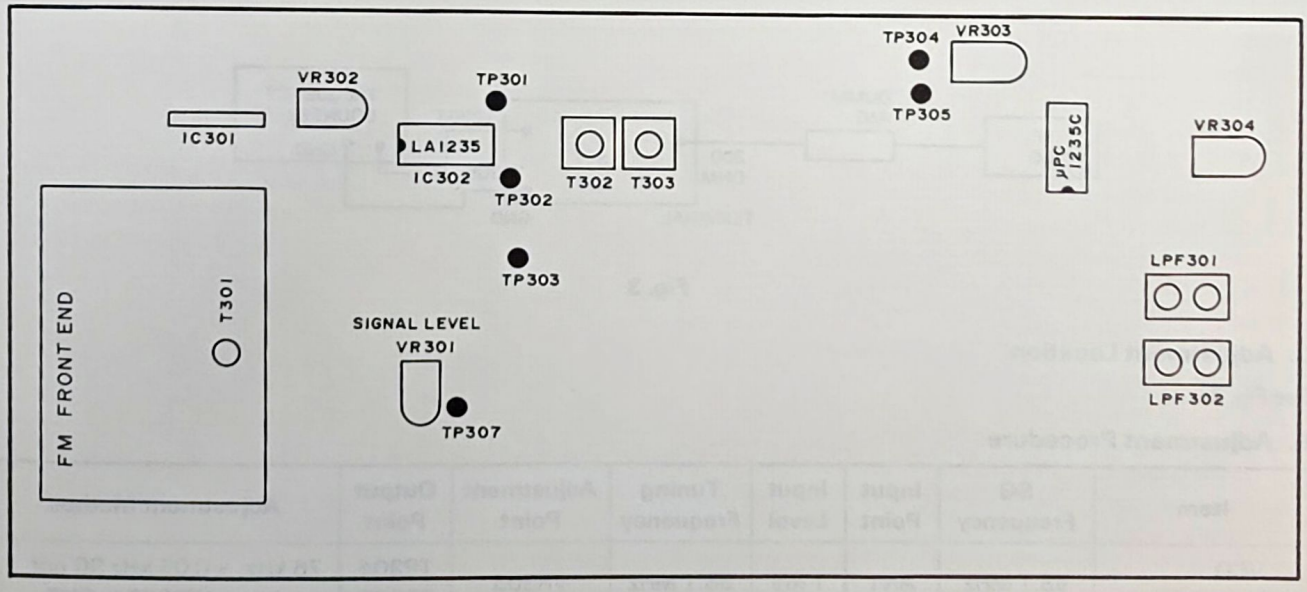

Fig. 2

D. Adjustment Procedure

Item	SG Frequency	Input Point	Input Level	Tuning Frequency	Adjustment Point	Output Point	Adjustment Method
1. FM Alignment	98.1 MHz 75 kHz mod. 1 kHz	ANT	1 mV	98.1 MHz	T302 T303	TP301 TP302	Adjust T302, T303 for less than 50 mV DC. Then adjust T302 for maximum output. Adjust T303 for minimum. Repeat several times.
2. Distortion Adjustment	98.1 MHz mod. 75 kHz at 1 kHz	ANT	1 mV	98.1 MHz	T303 (MONO) T301 (STEREO)	Output	Adjust for minimum distortion. Adjust mono first. Adjust STEREO by L or R side.
3. Frequency Check	98.1 MHz	ANT	1 mV	98.1 MHz	T302	TP301 TP302	Check for less than 50 mV DC.
4. Signal LED Adjustment	98.1 MHz	ANT	10 mV	98.1 MHz	VR301	Signal LED	Lights 5 segments.
	98.1 MHz	ANT	0 μV	98.1 MHz	–	Signal LED	Check extinguishing of lights when down 5 dB.
5. STEREO Indicator Adjustment	98.1 MHz Stereo signal	ANT	5 μV	98.1 MHz	VR302		Adjust to level where STEREO indicator lights.
6. Separation Adjustment	98.1 MHz	ANT	1 mV	98.1 MHz	VR304	Output	Attain L and R balance at point nearest to max. separation.
7. Auto Scan Adjustment	98.1 MHz	ANT	15 μV	–	–	–	Turn on AUTO SCAN SW. And when scanning by pressing up and down should stop at SG Freq.

2. FM VCO Adjustment

A. Required Test Equipment

1. RF signal generator
2. Frequency counter

B. Connection Diagram

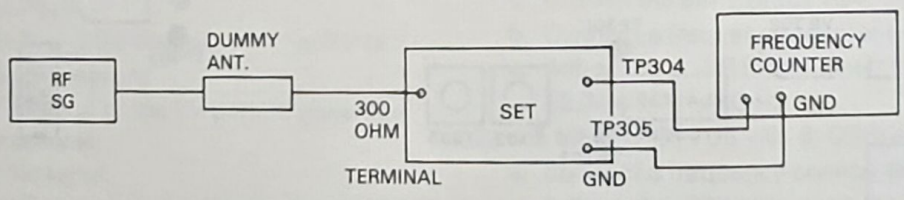

Fig. 3

C. Adjustment Location

See Fig. 2.

D. Adjustment Procedure

Item	SG Frequency	Input Point	Input Level	Tuning Frequency	Adjustment Point	Output Point	Adjustment Method
VCO Adjustment	98.1 MHz	ANT	1 mV	98.1 MHz	VR303	TP304 TP305	76 kHz, ±0.05 kHz SG not modulated TP305 is GND.

3. Confirmation of Synthetic Stereo

A. Required Test Equipment

1. Audio Frequency oscillator
2. Dummy Load
3. Double needle type AC voltmeter
4. Two element oscilloscope

B. Connection Diagram

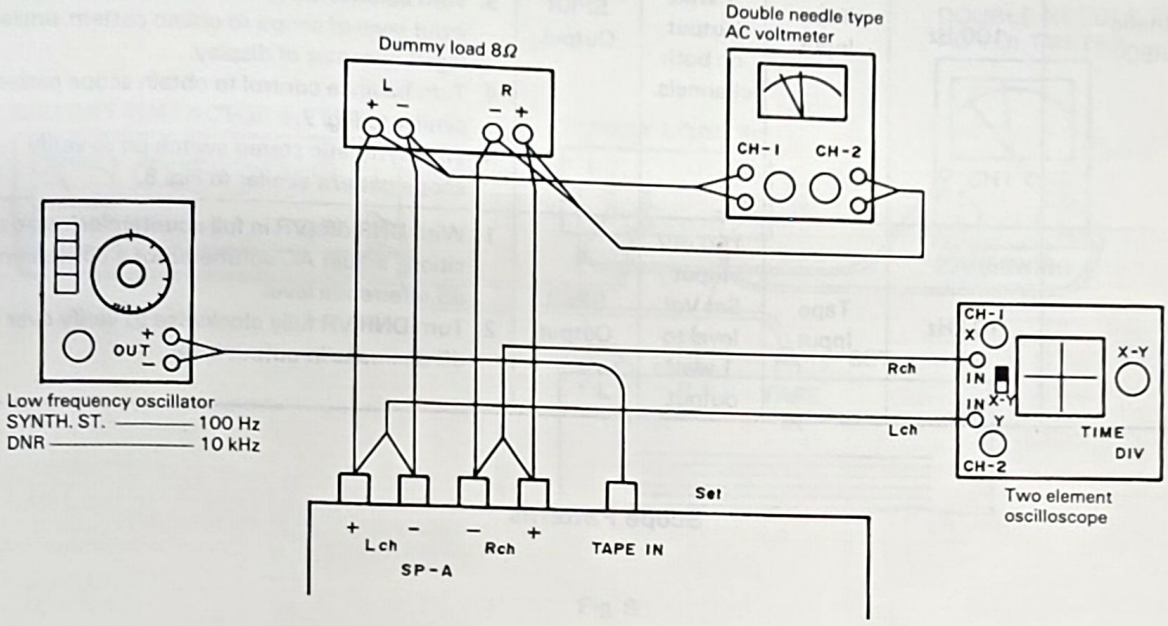

Fig. 4

C. Adjustment Location

See Location of Controls.

D. Confirmation Procedure

Item	OSC. FREQ.	Input Terminal	Input Level	Output Terminal	Method of Confirmation
1. Synthetic STEREO	100 Hz	Tape Input	Set for 1 watt output on both channels.	SPKR Output	1. With synthetic STEREO SW off, set oscilloscope to X-Y mode. 2. Turn balance control to full L side. Adjust scope to obtain pattern similar to Fig. 5 at center of display. 3. Turn balance control to full R side and adjust R input level of scope to obtain pattern similar to Fig. 6 at center of display. 4. Turn balance control to obtain scope pattern similar to Fig. 7. 5. Turn synthetic stereo switch on to verify scope pattern similar to Fig. 8.
2. DNR	10 kHz	Tape Input	150 mV Input Set Vol. level to 1 watt output.	SPKR Output	1. With DNR off (VR in full counterclockwise position), adjust AC voltmeter for a convenient 0 dB referrence level. 2. Turn DNR VR fully clockwise to verify over 10 dB decrease in output level.

Scope Patterns

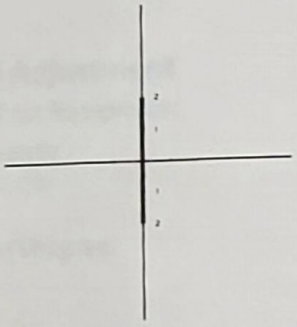

Fig. 5

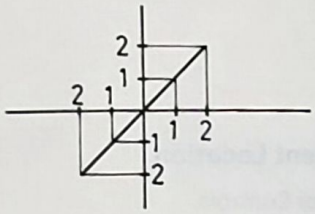

Fig. 6

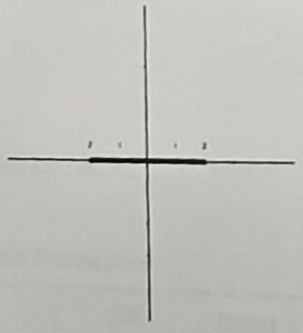

Fig. 7

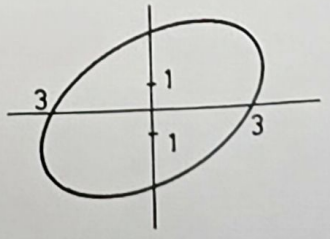

Fig. 8

4. AF Adjustments and Check

A. Required Test Equipment

1. Distortion factor meter
2. Dummy Load
3. Double needle type AC voltmeter

B. Connection Diagram

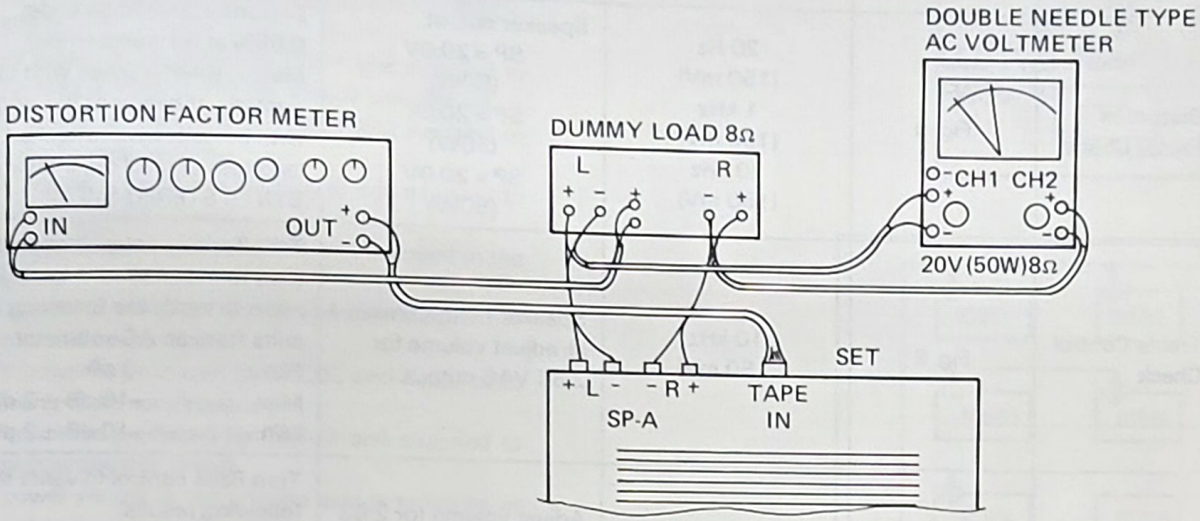

Fig. 9

C. Adjustment Locations

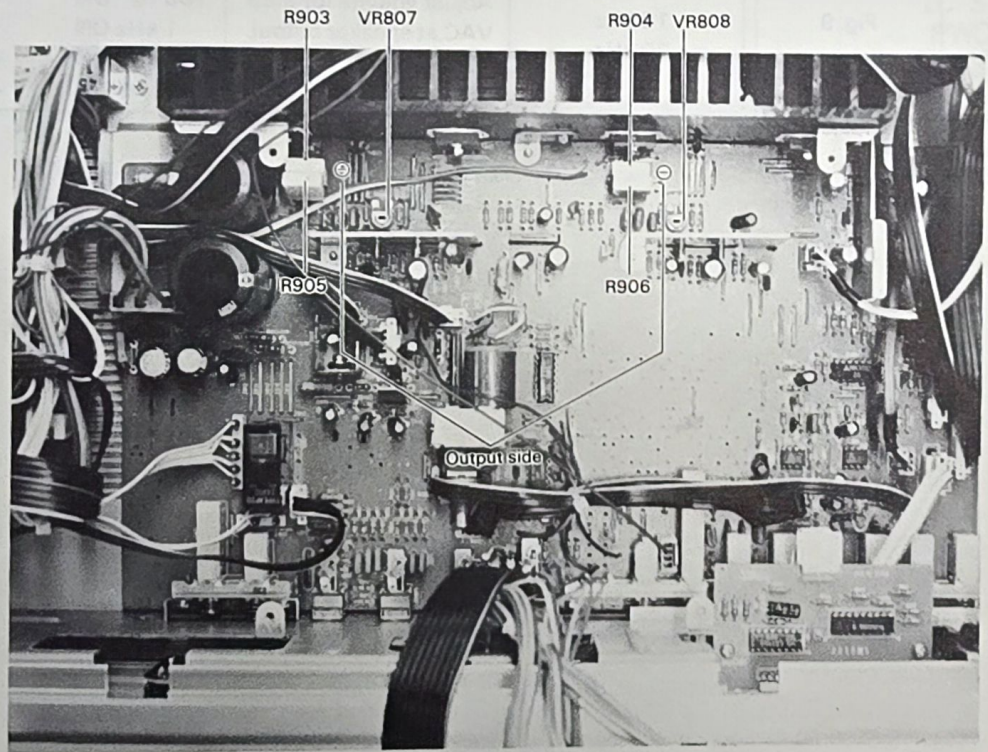

Fig. 10

D. Adjustment Procedure

Item	Connection Diagram	Oscillator Frequency	Test Point	Check/Adjustment Method
1. Idling Adjustment	See Fig. 10 for ADJ. location.	No Input Volume minimum	DC voltmeter leads across R903 or R905 for L CH. Across R904 or R906 for R CH.	Turn power on and after 30 sec. turn off speaker switches. Adjust VR807 (L CH) then VR808 (R CH) for 6.6 mV reading on DC voltmeter.
2. Distortion Factor Check	Fig. 9	20 Hz (150 mV) 1 kHz (150 mV) 20 kHz (150 mV)	Speaker output SP = 20.0V (50W) SP = 20.0V (50W) SP = 20.0V (50W)	Distortion should be under 0.05% at 50 watts output. Measurements taken with tone controls at center or flat, and with bottom cover attached, loudness control off, DNR and SYNTH STEREO SW off.
3. Treble Control Check	Fig. 9	10 kHz (150 mV)	Speaker output terminal, adjust volume for 2.83 VAC output.	Turn Treble control from center (flat) to maximum then to minimum to verify the following results from an AC voltmeter. Flat 0 dB Max. +10 dB ±2 dB Min. −10 dB ±2 dB
4. Bass Control Check	Fig. 9	100 Hz (150 mV)	Adjust volume for 2.83 VAC output at speaker output.	Turn Bass control to verify the following results: Flat 0 dB Max. +10 dB ±2 dB Min. −10 dB ±2 dB
5. Loudness Check	Fig. 9	100 Hz 1 kHz 10 kHz 20 kHz (150 mV)	Adjust volume for 2.83 VAC at speaker output.	Turn loudness switch on and verify the following results: 100 Hz ON +8 dB 1 kHz ON 0 dB 10 kHz ON +4 dB 20 kHz ON +7 dB

CIRCUIT DESCRIPTIONS

Power Supply Section

(1) +5V power is produced by TR901 and supplied to the LED meter circuit and IC switch circuit.
(2) +5V power is produced by TR902 and supplied to the LED meter circuit.
(3) ±15V power is produced by TR903 and TR904 and supplied to IC switch circuit, IC805, IC806, IC807, IC808, IC801, IC802, IC803, IC804, IC811, IC812, and IC815.
(4) ±45V power is produced by D901 and supplied to IC809, IC810, TR803, TR804, TR805 and TR806.
(5) +35V power is produced by TR605 and supplied to the microprocessor circuit.
(6) −24V power is produced by TR606 and supplied to the microprocessor circuit.
(7) +5V power is produced by IC651 and supplied to the microprocessor circuit.
(8) +5V power is produced by TR654 and supplied to the microprocessor circuit.
(9) +12V power is produced by TR602 and supplied to the microprocessor circuit.
(10) +5V power is produced by TR603 and supplied to the microprocessor circuit.
(11) The power switch to the primary side is tuned on or off by the signal from the microprocessor to terminal PT3.

Power Supply Rail Block Diagram

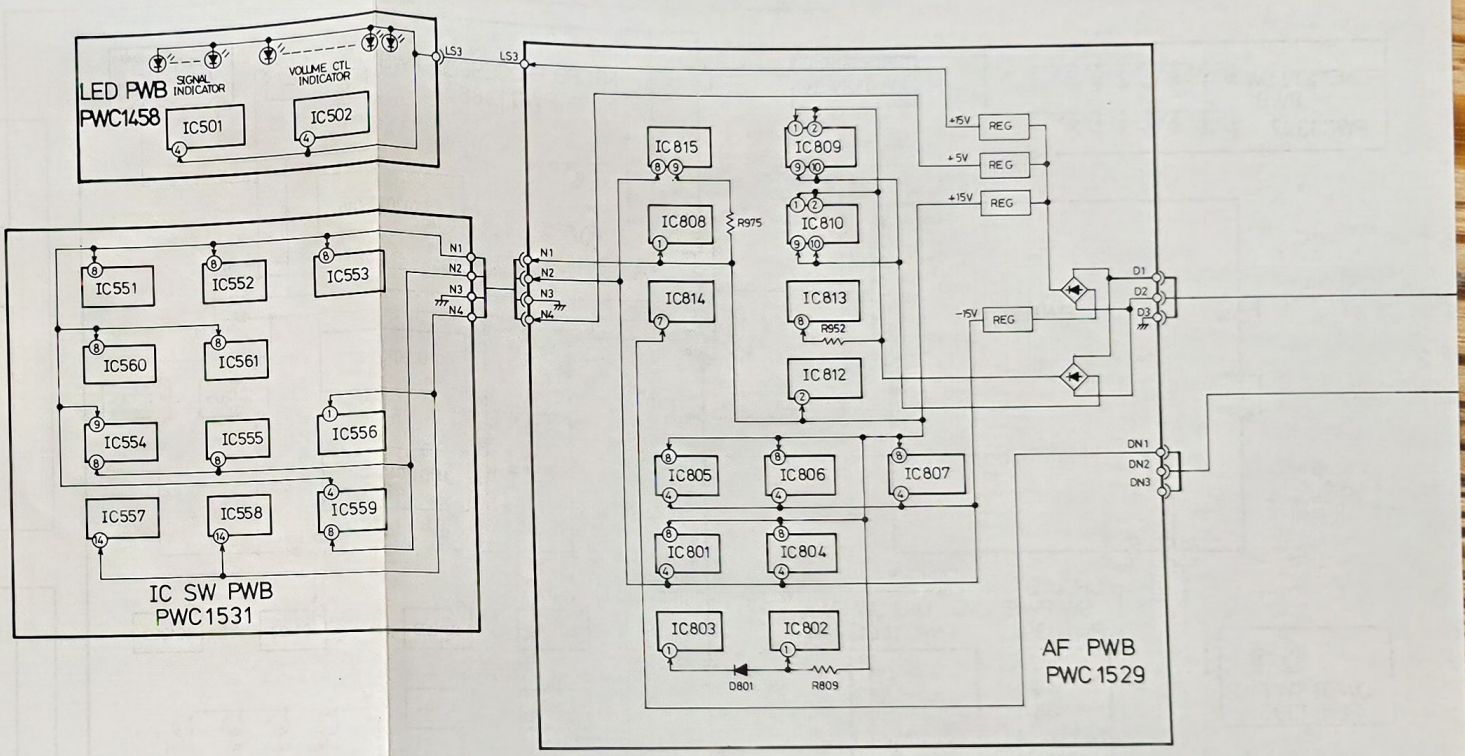

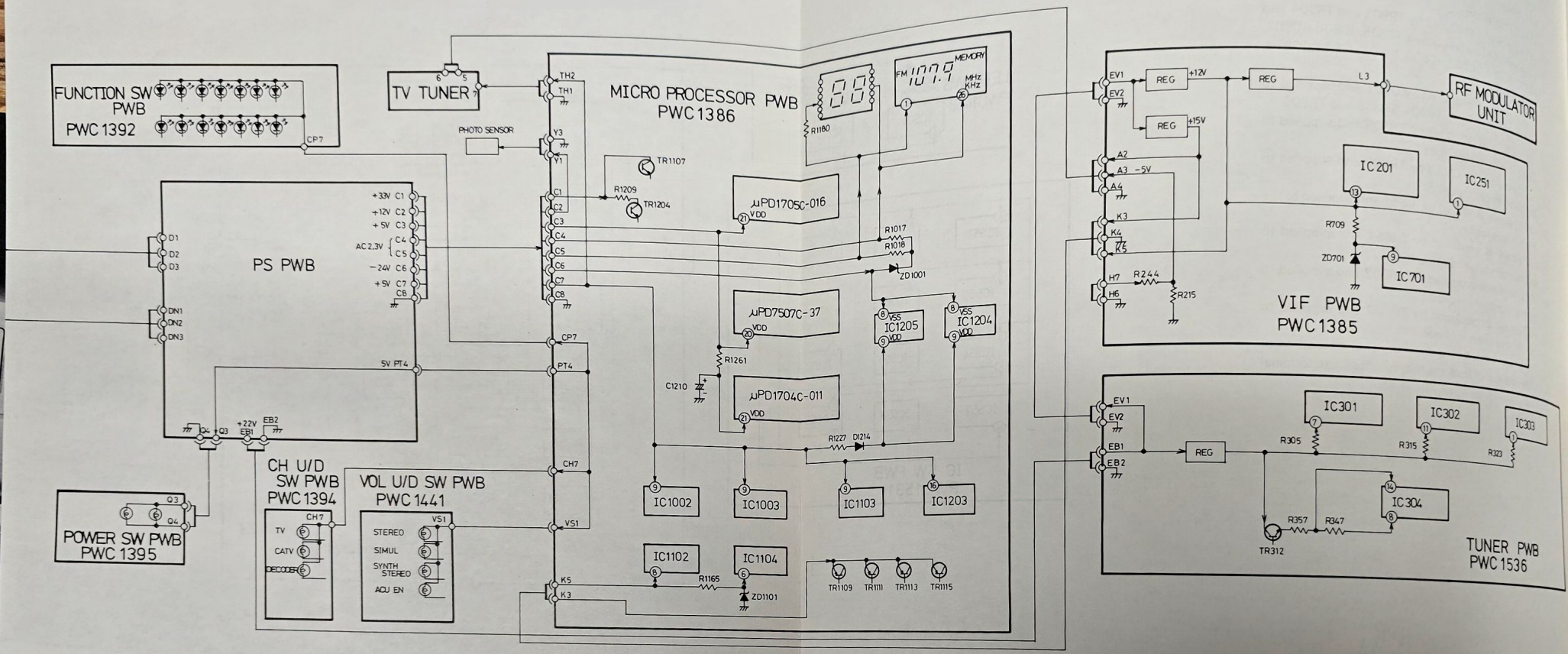
FUNCTION SW PWB
PWC 1392
TV TUNER
PHOTO SENSOR
MICRO PROCESSOR PWB
PWC 1386
PS PWB
POWER SW PWB
PWC 1395
CH U/D
SW PWB
PWC 1394
VOL U/D SW PWB
PWC 1441
μPD1705C-016
μPD7507C-37
μPD1704C-011
IC1002
IC1003
IC1103
IC1203
IC1102
IC1104
IC1205
IC1204
RF MODULATOR
UNIT
IC201
IC251
IC701
VIF PWB
PWC 1385
IC301
IC302
IC303
IC304
TUNER PWB
PWC 1536

Micro Processor Section

1. Relative Function Switch & Output Signals

OUT PUT TERMINALS MODE / FUNCTION SWITCH	MONITOR (REC)	SPEAKER	TV (VIDEO/AUDIO)	VIDEO.1 (VIDEO/AUDIO)	VIDEO.2 (—/AUDIO)	TAPE (VIDEO/AUDIO)
TV	TV (ON)	TV	TV/TV	TV/TV	/TV	—/TV
VIDEO. 1	VIDEO.1 (ON)	VIDEO.1	VIDEO.1/VIDEO.1	—	/VIDEO.1	—/VIDEO.1
VIDEO. 2	VIDEO.2 (ON)	VIDEO. 2	VIDEO.2/VIDEO.2	VIDEO.2/VIDEO.2	—	—/VIDEO.2
SIMUL	TV (ON)	FM	TV/FM	TV/FM	—/FM	—/FM
FM	(OFF)	FM	—/FM	—/FM	—/FM	—/FM
AM	(OFF)	AM	—/AM	—/AM	—/AM	—/AM
TAPE	(OFF)	TAPE	—/TAPE	—/TAPE	—/TAPE	
PHONO	(OFF)	PHONO	—/PHONO	—/PHONO	—/PHONO	—/PHONO

2. Connections Diagram

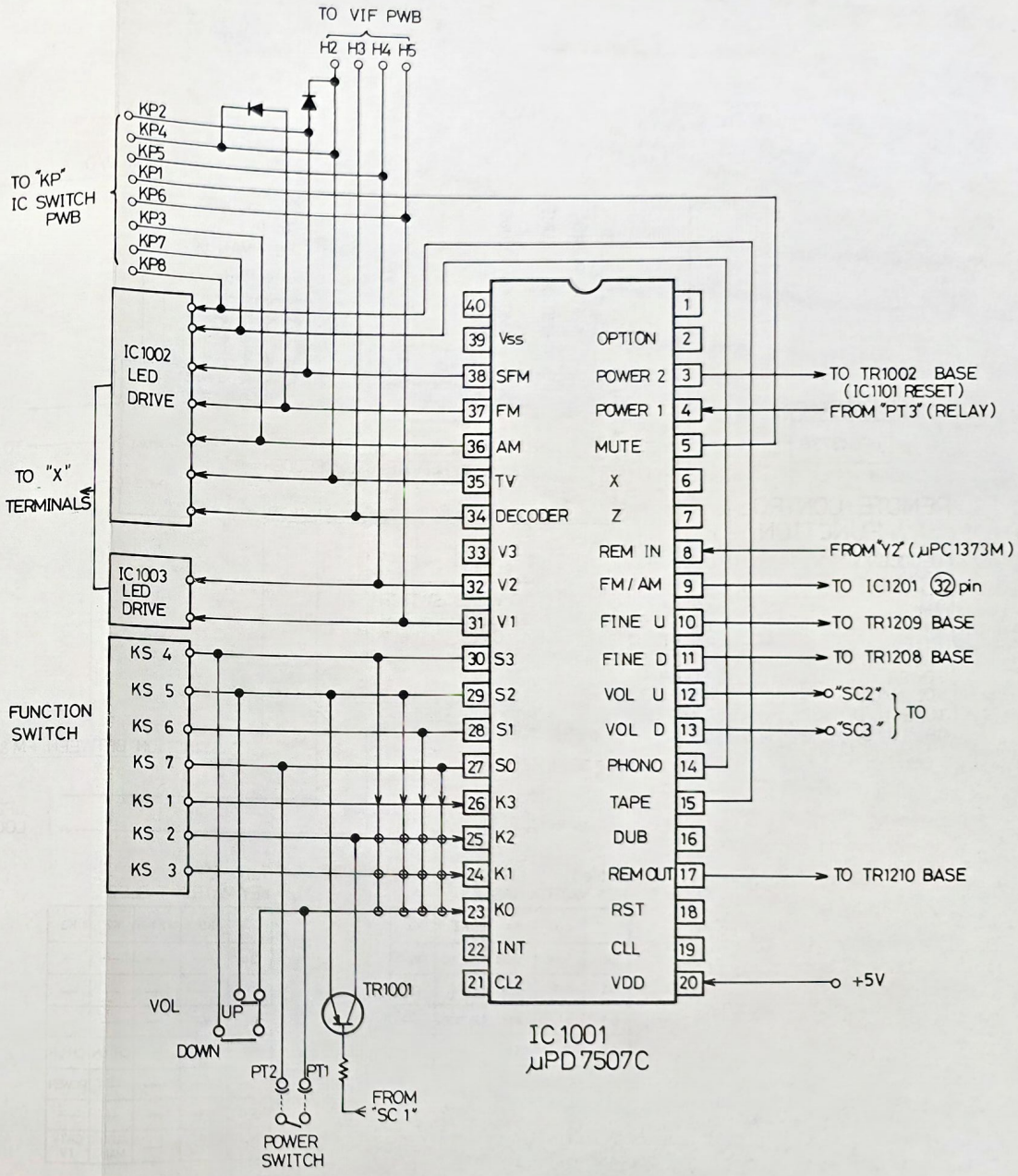

3. Block Diagram

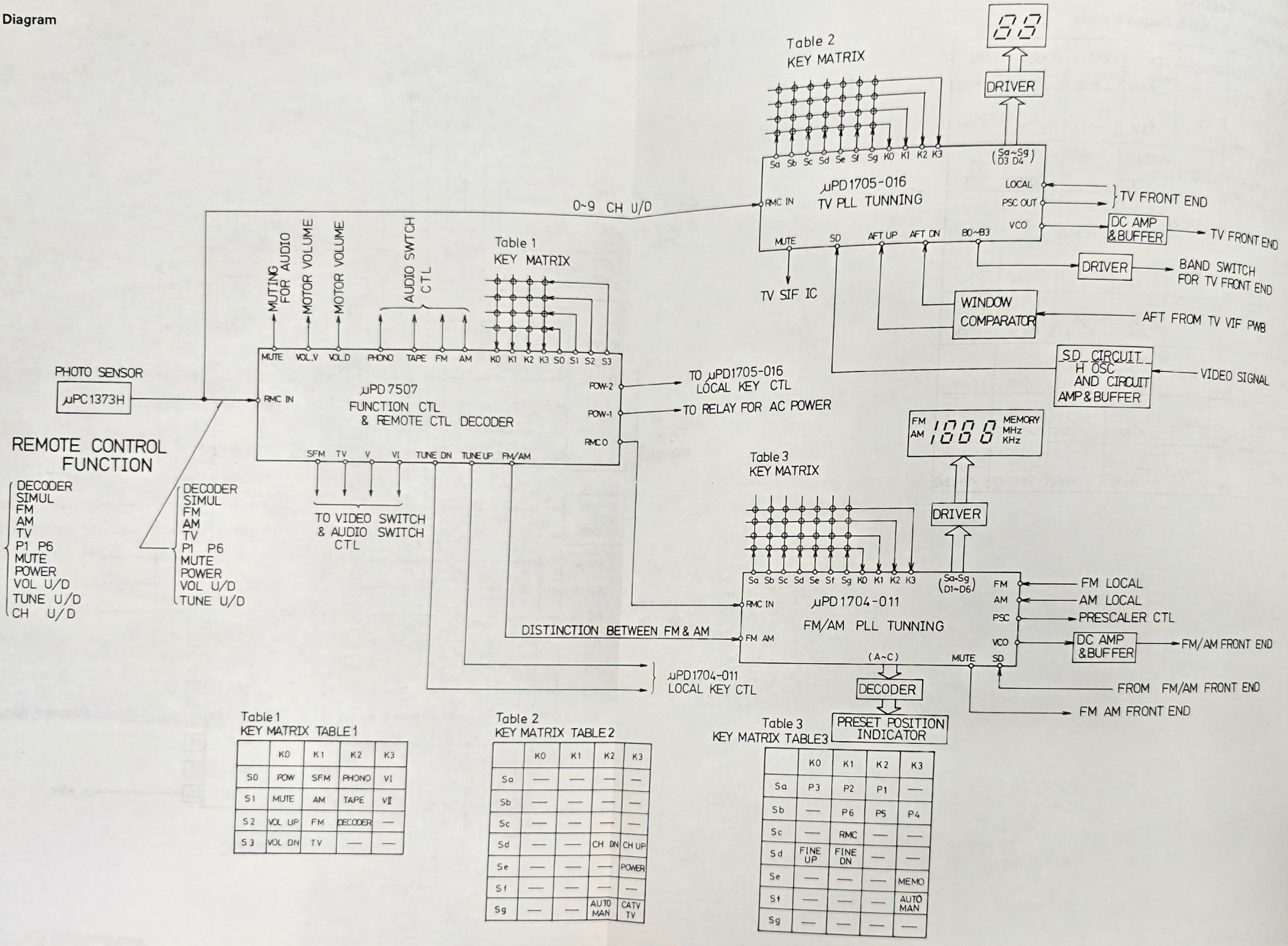

Table 1
KEY MATRIX TABLE 1

	K0	K1	K2	K3
S0	POW	SFM	PHONO	VI
S1	MUTE	AM	TAPE	VII
S2	VOL UP	FM	DECODER	—
S3	VOL DN	TV	—	—

Table 2
KEY MATRIX TABLE 2

	K0	K1	K2	K3
Sa	—	—	—	—
Sb	—	—	—	—
Sc	—	—	—	—
Sd	—	—	CH DN	CH UP
Se	—	—	—	POWER
Sf	—	—	—	—
Sg	—	—	AUTO MAN	CATV TV

Table 3
KEY MATRIX TABLE 3

	K0	K1	K2	K3
Sa	P3	P2	P1	—
Sb	—	P6	P5	P4
Sc	—	RMC	—	—
Sd	FINE UP	FINE DN	—	—
Se	—	—	—	MEMO
Sf	—	—	—	AUTO MAN
Sg	—	—	—	—

4. TV. PLL Tuning

μPD1705C-016 is CMOS LSI developed for the PLL frequency synthesizer TV sets.
The PLL and Controller sections are packaged in one chip.
Adoption of the pulse swallow system in the PLL section ensures high precision fine tuning.
Also the remote control function is included.

1) Features

- ○ PLL and controller built in one chip.
- ○ Many channel selection modes
  10 keys direct channel selection. AUTO/MANUAL
  UP/DOWN channel selection..... AUTO/MANUAL
- ○ Adoption of pulse swallow system for high precision fine tuning.
- ○ Channel search function.
- ○ CATV channel selection available.
- ○ Built-in remote control decoder.
- ○ +5V single power supply.

2) General description of functions

- ○ Receiving band
  VHF/UHF/CATV in American standard
  VHF: CH.2 to CH.13
  UHV: CH.14 to CH.83
  CATV: CH.A to CH.WW
- ○ Channel selection function
  - ★ 10-key direct channel selection, AUTO/MANUAL mode.
  - ★ Channel UP/DOWN channel selection, AUTO/MANUAL mode.
- ○ AFT (Auto Fine Tuning) function
  - ★ 1 step 40 kHz ± 2.2 MHz Max.
  - ★ Detection at every 8 ms.
- ○ Remote control function
  Built-in remote control receiving function.
- ○ Display
  - ★ 5-digit dynamic display (130 Hz)
  - ★ Channel – 2 numerical digits and CATV, panel lock, remote control reception display.
- ○ Comparison frequency
  - ★ ft = 5 kHz

3) Terminals description

PIN. NO.	SYMBOL	TERMINAL NAME	DESCRIPTION
3 ~ 9	Sa ~ Sg	Segment	● 7-segment display output. ● Also used as key matrix output. ● High withstanding voltage -30V. ● Active High.
10 ~ 13	K_0 ~ K_3	Key	● Key matrix return signal input terminal.
14 ~ 18	D_5 ~ D_1	Digit	● Display digit signal output. ● Active High.
19 20	X_1 X_2	Reference Frequency Oscillation Terminal	● Connect 4.5 MHz X'tal oscillator. ● Built-in feedback resistor.
21	VDD	Power Terminal	● Supplies +5V ± 10% voltage. ● VDD rise time must be 500 ms or shorter. ● Extremely long rise time may result in abnormal initialization.
22	E_0	Phase Detection Output	● Charge pump output of phase detector. ● Supplies station selection voltage to the tuner varactor via low pass filter.
23	GND	Ground	● Connect to system GND.

<table>
<tr><th>PIN. NO.</th><th>SYMBOL</th><th>TERMINAL NAME</th><th>DESCRIPTION</th></tr>
<tr><td>24</td><td>CE</td><td>Chip Enable</td><td>● High..... Normal operation.
● Low..... Memory hold
(Display-off, PLL-function-off)
● Low level of less than 134 μs is not accepted.</td></tr>
<tr><td>25</td><td>REM</td><td>Remote
Control
Signal Input</td><td>● Remote Control signal input terminal.
● Connect preamplifier μPC1373H output
● Active Low.</td></tr>
<tr><td>26</td><td>LOCAL</td><td>Local
Oscillation
Input</td><td>● Input tuner local oscillation signal through prescaler circuit.
● Because of built-in AC amplifier, DC is cut off with capacitor when inputting.</td></tr>
<tr><td>27</td><td>PSC</td><td>Pulse
Swallow</td><td>● Pulse swallow control terminal.
● Connect to PSC terminal of tuner "MS".</td></tr>
<tr><td>39</td><td>MUTE</td><td>Muting</td><td>● Signal output terminal for cutting off noise, etc. produced when PLL is unlocked.
● Active High.</td></tr>
<tr><td>33 ~ 36</td><td>B_0 ~ B_3</td><td>Band</td><td>● Outputs tuner band switching signal.
● The signal output form is as follows.
<table>
<tr><th></th><th>VL
A3 ~ A5</th><th>VH
A ~ R,
A1, A2</th><th>S ~ WW</th><th>UHF</th></tr>
<tr><td>B_0</td><td>1</td><td>1</td><td>0</td><td>0</td></tr>
<tr><td>B_1</td><td>0</td><td>1</td><td>0</td><td>0</td></tr>
<tr><td>B_2</td><td>0</td><td>0</td><td>1</td><td>0</td></tr>
<tr><td>B_3</td><td>0</td><td>0</td><td>0</td><td>1</td></tr>
</table></td></tr>
<tr><td>37
38</td><td>AFT.U
AFT.D</td><td>AFT input</td><td>● AFT signal input terminal.
● Input AFT signal as converted by LM393 to binary.</td></tr>
<tr><td>41</td><td>SD</td><td>Station
Detector</td><td>● Terminal for stop signal input at auto tuning.
● Must go low within 100 ms after PLL lock.
● Active Low.</td></tr>
</table>

4) Description of control key

SYMBOL	FUNCTION
0 to 9 (Ten Key)	● Used for direct channel selection. ● For direct selection, input 2 digits of channel to be selected. (ex. for channel 8, input (0), (8). For channel 12, input (1), (2)) ● If next key is not pressed with in 2 to 3 seconds after the first key (2 through 9) is pressed, the input channel is selected. (ex. (3) . . . . . channel 3) ● If any channel out of the range is erroneusly input, the channel is not selected but the initial channel is displayed again. ● For auto mode (when AUTO/MAN switch is ON), if the designated channel is not broadcasting the channel goes up to the broadcasting channel.)
CHU (Channel Up)	● In the case of auto mode (when AUTO/MAN switch is ON), pressing this key causes the channel to go up to the broadcasting channel automatically. ● If the key is held down, the channel goes up to the broadcasting channel again after booms following reception of a channel. ● This operation is repeated until the key is released. ● In the manual mode (when AUTO/MAN switch is OFF), pressing this key causes the channel to go up by one channel. ● If the key is held down, the channel goes up by one channel and then in booms, the channel again goes up by one channel. ● This is repeated until the key is released.
CHD (Channel Down)	● This key is same as CHU except that CHD is for going down.
AUTO/MAN (Automatic and Manual)	● Mode changing switch for channel selection and fine tuning. ● When the switch is ON, the auto mode is selected and when OFF, the manual mode is selected, respectively. ● In the auto mode, broadcasting signal is detected when selecting channel. ● Also AFT always operates. ● In the manual mode, broadcasting signal is not detected.
CATV/TV (Band Changing)	● Band changing switch; CATV is selected when the switch is ON and TV is selected when OFF. ● When CATV is selected, channel 2 thru 36 (ch. 2 thru 13: VHF; 14 thru 64: CATV) can be received, and when TV selected, channel 2 thru 83 (ch. 2 thru 13: VHF; 14 thru 83: UHF) can be received, respectively. ● When the switch is actuated the channel is initialized to channel 2.

5) Connection of key matrix and switch format

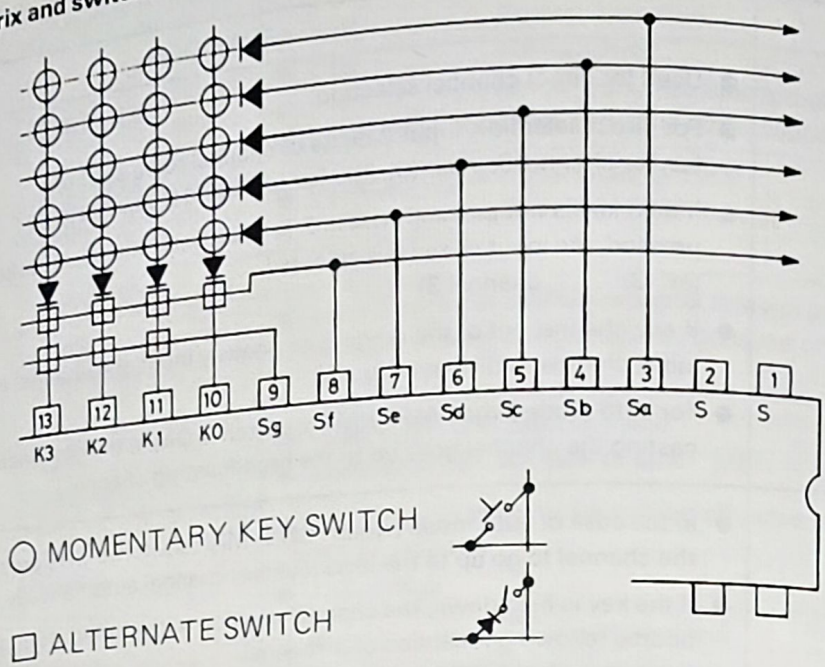

6) Connection diagram

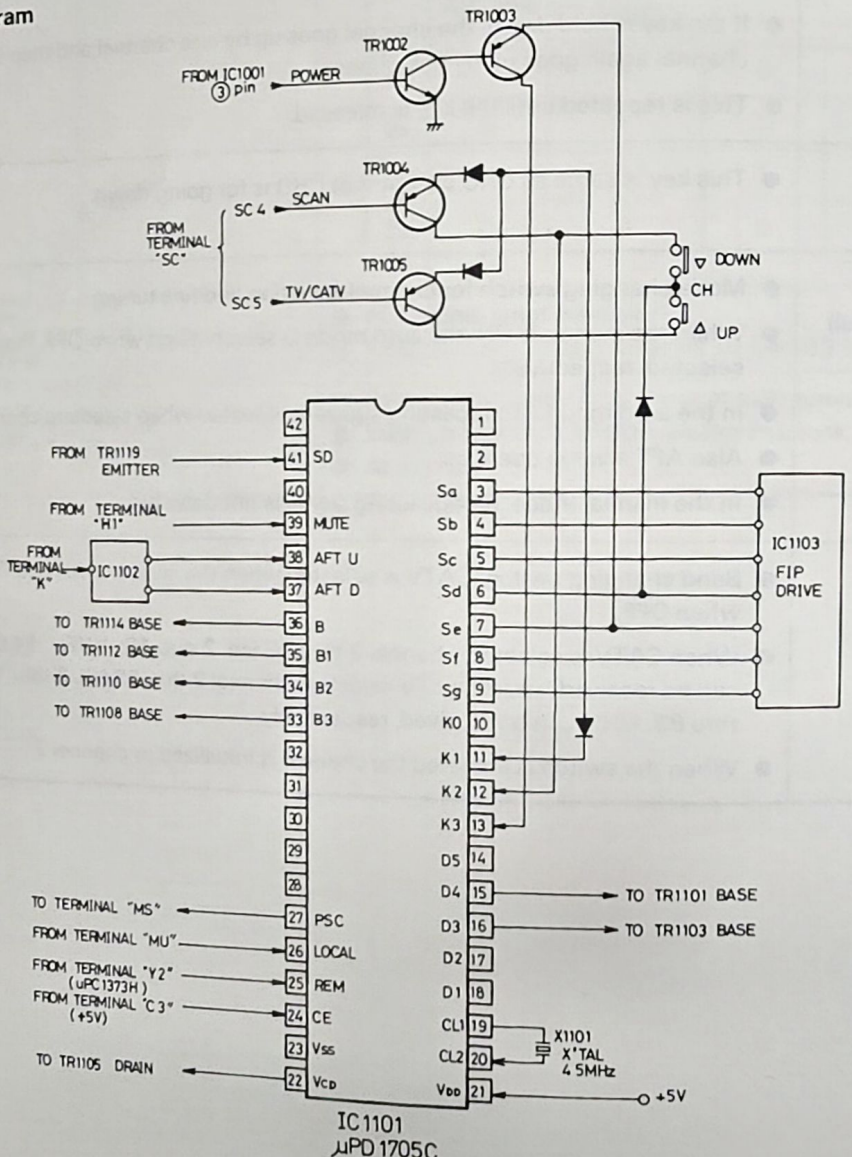

5. FM/AM PLL Tuning

μPD1704C-011 is a CMOS LSI with built-in PLL and controller that can receive FM/AM broadcasting. Physically, it is a DIP (Dual In-line Package) with clock, programmable timer and other functions. A remote controller can also be connected. μPD-1704C-011 when combined with the prescaler μPB553AC can form a multi-function, high performance FM/AM digital tuning system for such as a home stereo receiver.

1) Features

- ○ Can drive FIP directly (segment only)
- ○ Built-in PLL, swallow counter controller.
- ○ 5V ± 10% signal power supply.
- ○ High FM reference frequency of 25 kHz (pulse swallow system).
- ○ 6 push buttons for presetting independently six FM and AM station each.
- ○ Last channel memory, one station for FM and FM each.
- ○ Remote controller (μPD1943G) connectable (power, source, FM/AM, preset station selectable).

2) General description of functions

○ Receiving frequency

	Frequency range	Channel space	Reference frequency	Intermediate frequency
FM	87.9 ~ 107.9 MHz	200 kHz	25 kHz	10650, 10655, 10700 MHz
AM	530 ~ 1620 kHz	10 kHz	10 kHz	450 kHz

○ Auto tuning (Saw tooth wave mode)
AUTO UP, AUTO DOWN } – The station once tuned to is held.

○ Preset memory call – 6 push buttons for calling FM/AM function.

3) Terminal description

PIN. NO.	SYMBOL	TERMINAL NAME	DESCRIPTION
1 ~ 7	Sa ~ Sg	Segment Output	● Display segment signal output and key return signal source terminal. ● This terminal is open drain output with standing max. 30V and therefore can be directly connected to the FIP segment terminal (Pull down resistor is necessary). ● Active High.
8 ~ 11	K_0 ~ K_3	Key Return Signal Input	● Terminal for key return signal from externally connected key matrix. ● Key return signal sources are segment terminals Sa throu Sg and Tuner and Phono terminal AND signal.
12 ~ 17	D_1 ~ D_6	Digit Output	● Display digit signal output terminals. ● For FIP connection, one stage of buffer such as PNP transistor is necessary. ● Active Low.
18	MUTE	Mute	● Muting output terminal for eliminating shock noise when PLL is unlocked. ● The signal is output for period 55 ms befor PLL data (programmable counter contents) change to 55 ms after data change. ● The mute signal is output in the following modes. * AM/FM and selector switching * MANUAL UP/DOWN * AUTO UP/DOWN * Preset memory call (including preset scan) 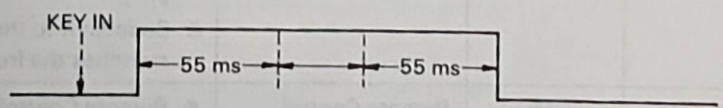 PLL data processing time (Max. 10 ms) ● It is output constantly in the following modes. * When OFF key is pressed (OFF mode) * CE terminal = Low

PIN.NO.	SYMBOL	TERMINAL NAME	DESCRIPTION
	CL1 CL2	X'tal	● X'tal oscillator connection terminal. ● 4.5 MHz X'tal is connected.
21	VDD	VDD	● Device power supply terminal, 5V ± 10% voltage is supplied when the device is in operation. ● The voltage can be reduced to 3.0V when memory is held. ● VDD rise time must be 500 ms or shorter (0 to 4.5V). ● If very long time is required for rise, abnormal initialization could be caused.
22 24	VCO	VCO (Error Out)	● Charge pump output of phase detector forming PLL. ● If divided oscillation frequency is higher than reference frequency, these terminal go high and if it is lower, they go low. ● Same signals are output simultaneously from 22 pin and 24 pin and therefore they can be connected to either of AM and FM LPF.
23	VSS	GND	● Connect to system ground.
25	CE	Chip Enable	● Device selection signal input terminal. ● Apply high level when device is to operate normally and apply low level when device is not used. ● When NONCLOCK is set with initialization matrix: * CE = High..... Normal operation * CE = Low ..... Display off, PLL operation off, internal clock generator off, Current consumption (10 μA or less, 3V). ● Low level and high level below 134 μs are not accepted.
26	SD	Station Detector	● Input terminal for detecting whether broadcasting station is received in the auto tuning (AUTO/UP/DOWN) mode. ● High level input stops auto tuning. ● It is required to input within 50 ms after PLL lock.
27	FM	FM Local Oscillator Signal Input	● FM programmable counter input. ● Input the FM local oscillator signal divided by 1/16 or 1/17 by the prescaler. ● Because of built-in AC amplifier, cut off DC with capacitor before inputting.
26	SD	Station Detector	● Input terminal for detecting whether broadcasting station is received in the auto tuning (AUTO UP/DOWN) mode. ● High level input stops auto tuning. ● It is required to input within 50 ms after PLL lock.
27	FM	FM Local Oscillator Signal Input	● FM programmable counter input. ● Input the FM local oscillator signal divided by 1/16 or 1/17 by the prescaler. ● Because of built-in AC amplifier, cut off DC with capacitor before inputting.
28	PSC	Prescaler Control	● Terminal for outputting signal to change frequency division ratio of prescaler when pulse swallow system is used for frequency division. ● Connect it to the PSC terminal of the prescaler μPB553 AC which switches the frequency division ratio between 1/16 and 1/17.
29	RMC	Remote Control Input	● Remote Control signal input terminal. ● Connect it to the collector of remote control switching transistor TR1210. ● Judgement is made according to the number of pulses input here.

<table>
<tr><th>PIN.NO.</th><th>SYMBOL</th><th>TERMINAL NAME</th><th>DESCRIPTION</th></tr>
<tr><td>30</td><td>AM</td><td>AM Local Oscillator Signal Input</td><td>● AM programmable counter input.
● Input AM local oscillator output.
● Because of built-in AC amplifier, cut off DC with capacitor before inputting.</td></tr>
<tr><td>32</td><td>FM/AM</td><td>FM/AM Power Supply Control</td><td>● Terminal for switching tuner AM/FM power supply
 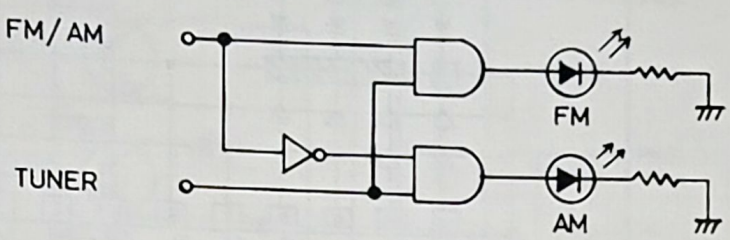

● In above circuit, when FM or AM key is pressed, the LED corresponding to the pressed band lights for 500 ms.</td></tr>
<tr><td>37 ~ 40</td><td>A ~ D</td><td>Preset Station Indicator Output</td><td>● Preset station display BCD output terminals.
● Outputs corresponding to preset stations are as shown below.
<table><tr><th>Preset Station</th><th>C</th><th>B</th><th>A</th></tr><tr><td>P1</td><td>0</td><td>0</td><td>1</td></tr><tr><td>P2</td><td>0</td><td>1</td><td>0</td></tr><tr><td>P3</td><td>0</td><td>1</td><td>1</td></tr><tr><td>P4</td><td>1</td><td>0</td><td>0</td></tr><tr><td>P5</td><td>1</td><td>0</td><td>1</td></tr><tr><td>P6</td><td>1</td><td>1</td><td>0</td></tr></table>1: High Level output
0: Low level output</td></tr>
<tr><td>41</td><td>DP</td><td>Decimal Point</td><td>● Decimal point display output terminal for FM frequency.
● Active Low.</td></tr>
</table>

4) Connection of key matrix and switch format

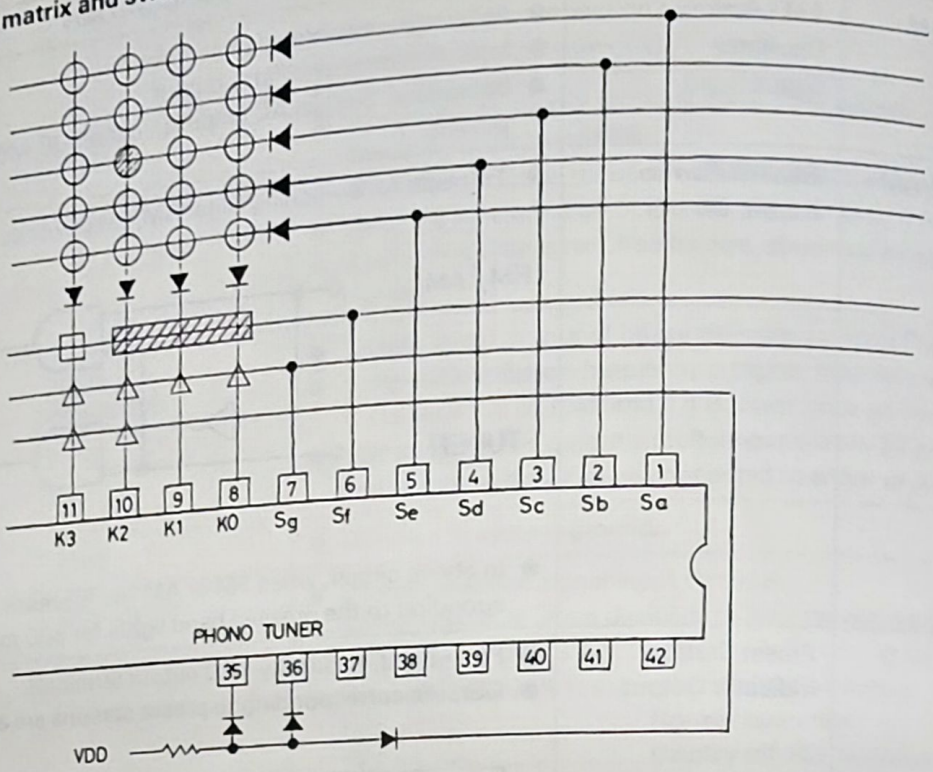

5) Switch type

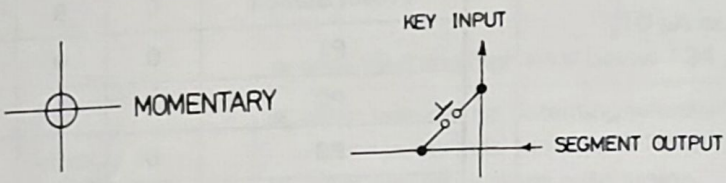

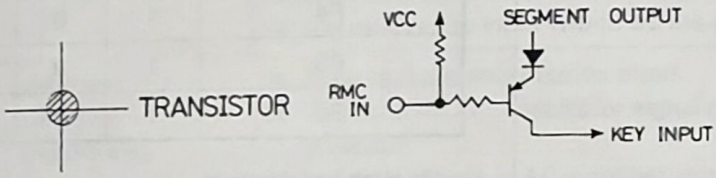

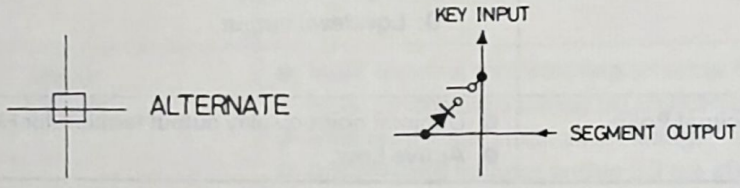

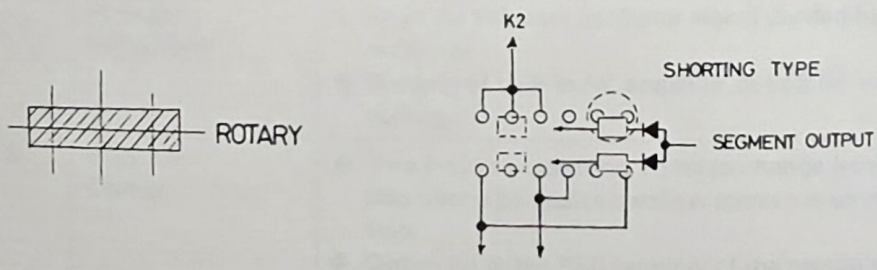

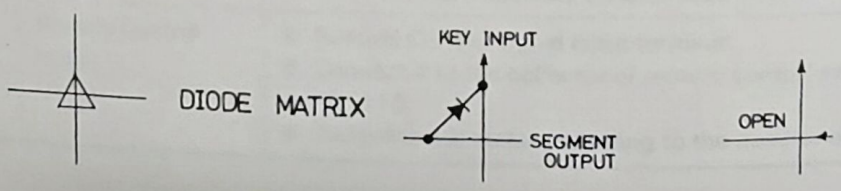

6) Connection diagram.

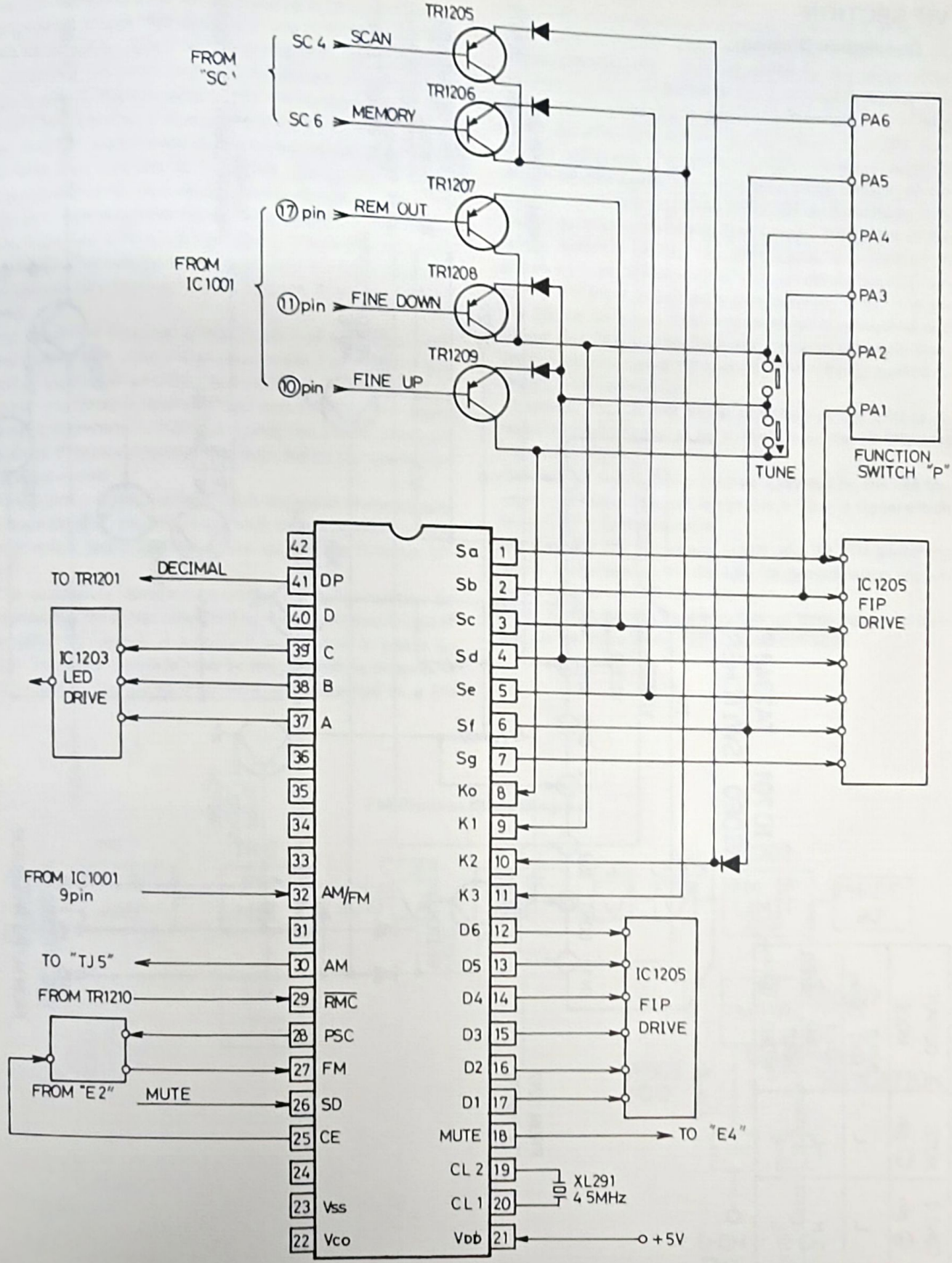

IC 1201
μPD1704C

Truth of relationship

CONT. 1 ② pin	CONT. 2 ④ pin	MUTE ⑦ pin	OUTPUT MODE
H	L	L	INPUT (TV) ①pin
L	H	L	INPUT 2 (VIDEO 1) ③pin
L	L	L	INPUT 3 (VIDEO 2) ⑤pin

IC 701 TA7348 P
VIDEO SWITCHER

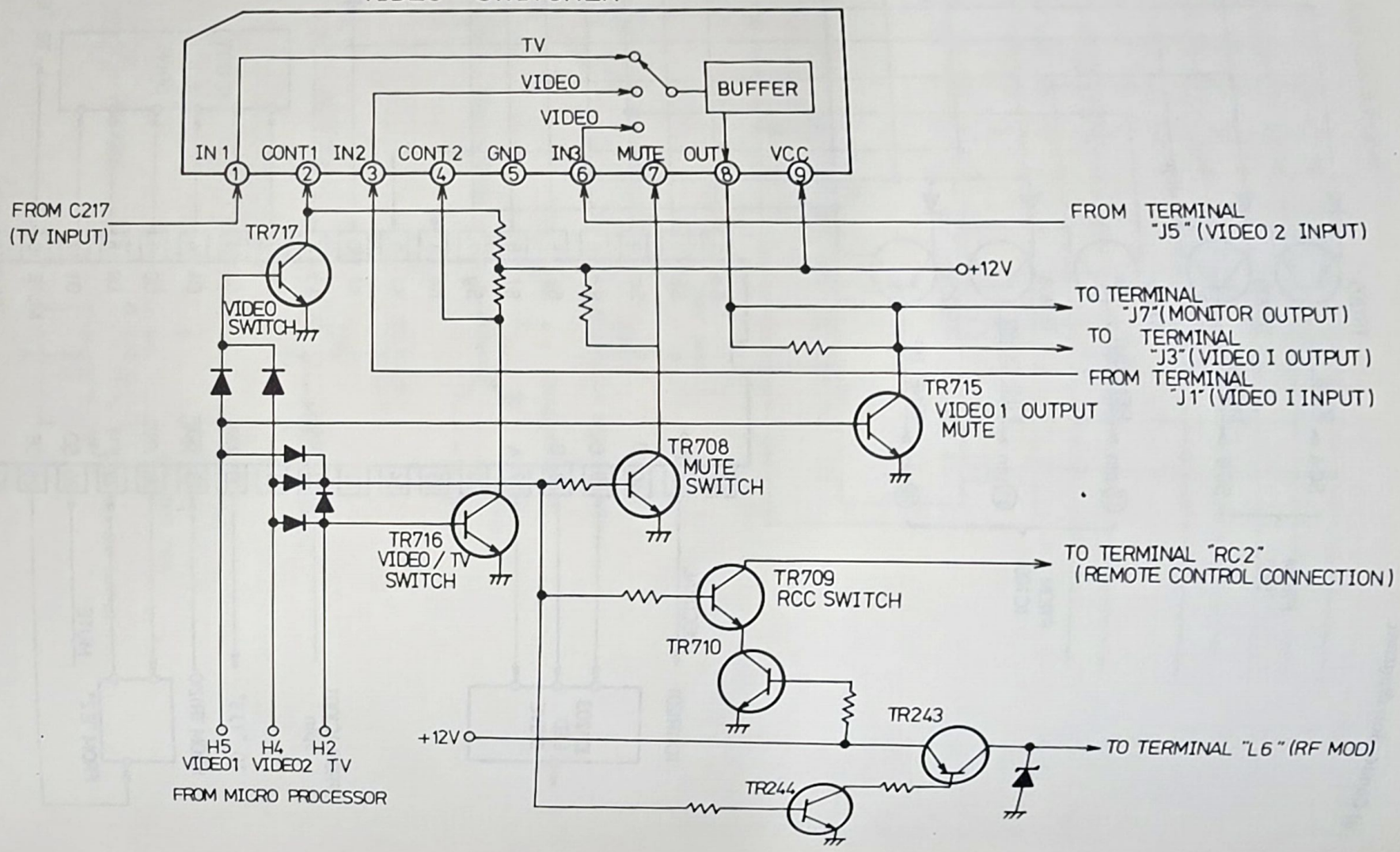

2. FM Reception Circuit

The VHF signal received by the antenna is amplified by the RF amplifier citcuit TR1 and fed to the mixer circuit TR2. The RF amplifier circuit not only amplifies the signal but also selects the input signal using several stages of the tuning circuit, thereby eliminating interfering signals. The AVS-1500 employs a dual-gate MOS FET as an RF amplifier, and the capacitance of the tuning circuit is provided by twin-type varicaps in 4-ganged configuration to improve interference elimination characteristics.

TR3 is a local oscillator circuit which controls the oscillation frequency with a voltage supplied from the microprocessor IC. The voltage is also applied to the local oscillator to convert the received signal into an IF signal of 10.7 MHz.

The converted IF signal is fed to pin 1 of IC201 via ceramic filter CF301. The IF signal fed to pin 1 of IC201 is amplified by the IF amplifier before being fed to pin 1 of IC302 via ceramic filters CF302 and CF303. The signal applied to pin 1 of IC302 is amplified by the DC feedback 3-stage IF limitar amplifier and then fed to the quadrature detector circuit.

This signal is extracted from pin 8 shifted in phase by quadrature (90°) by the 90° phase shift circuit (quadrature circuit) before being applied to the quadrature detector circuit.

The quadrature detector performs FM demodulation by multiplying the signal amplified by the above-mentioned IF amplifier by the signal amplified and shifted in phase by 90°. The signal demodulated by the quadrature detector is amplified by the audio amplifiers and extracted as a FM demodulated output from pin 6.

The audio amplifier output signal is fed to pin 2 of IC303. This signal is divided into a signal which is applied to the stereo decoder after being amplified by the preamplifier and the signal is extracted at pin 3 and feeds a pilot subcarrier signal (19 kHz) to the phase detector and the pilot signal detector circuit from pin 12 via an externally connected capacitor. The phase detector circuit is supplied with a 19 kHz signal which is produced by dividing an oscillation frequency of 76 kHz produced by the voltage controlled oscillator (VCO) into one quarter. Therefore, in the phase detector circuit, the pilot signal is compared in phase with the signal originally produced by the VCO circuit and if there is any difference between them, it is extracted as an error. This error voltage is smoothed and turned into DC by capacitors and resistors externally connected between pins 13 and 14 before being applied to the VCO for controlling.

Therefore, the 76 kHz signal produced at the VCO is always controlled so as to be in phase with the 19 kHz pilot subcarrier signal.

The 76 kHz signal thus produced is divided by the half frequency divider to be converted into a 38 kHz signal which in turn is fed to the decoder.

As a result, the composite signal and 38 kHz switching signal are applied to the decoder for demodulation and separation into L and R channels.

This demodulated signal is extracted from output terminals via low-pass filters (LPF301 and LPF302)

FM Process Block Diagram

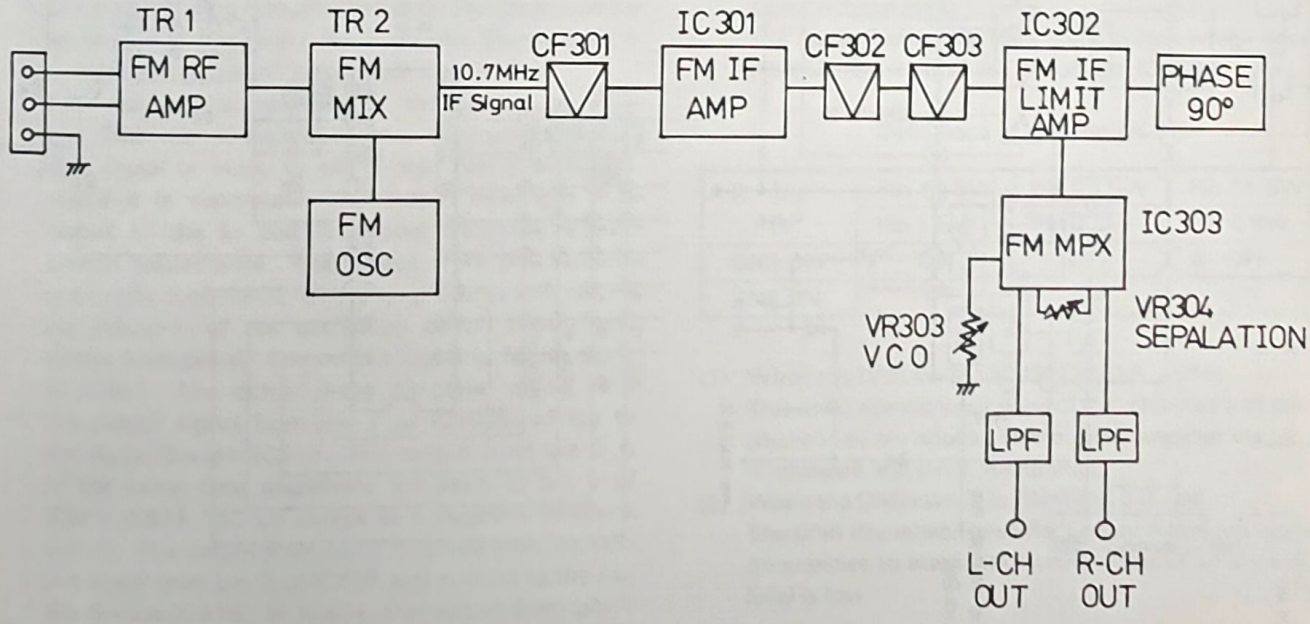

3. AM Reception Circuit

The signal received by the bar antenna is applied to pin 3 of IC304 and amplified by the RF amplifier, and then extracted from pin 5 and fed back to the IC from pin 6 after passing through an externally connected capacitor.
The signal fed to pin 6 is applied to the mixer circuit. The mixer circuit is supplied with a signal from the local oscillator to produce an intermediate frequency of 455 kHz which is extracted from pin 7.
The IF signal from pin 7 is fed to the IF amplifier circuit from pin 9 via IFT where it is amplified and then extracted from pin 10.
The output signal from pin 10 is fed to the detector circuit from pin 11 via IFT where it is detected, and output from pin 13.
The output signal from pin 13 is fed to pin 2 of IC301 via capacitors and resistors where it is amplified by the preamplifier and extracted from pins 6 and 7 after passing through the decoder post amplifier. The signal is passed through the low-pass filters before being extracted at the output terminals. The above is the description of the signal flow during AM reception.
The oscillating output signal of the local oscillator circuit is extracted from pin 20 via the buffer amplifier and fed to the microprocessor IC.

Basic Block Diagram
Remote Control Transmitter

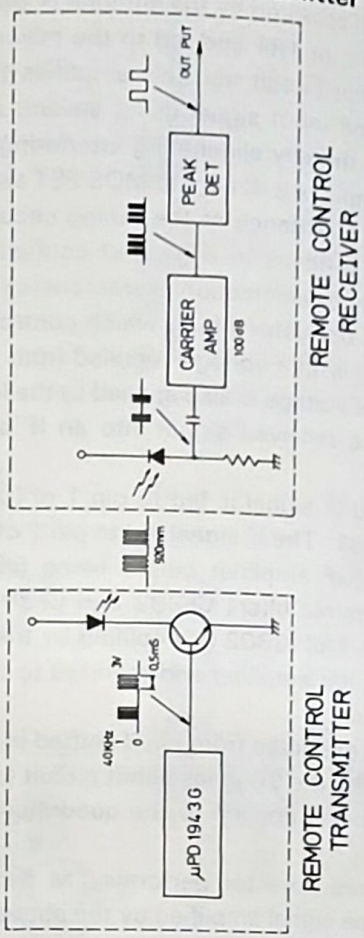

AM Process Block Diagram

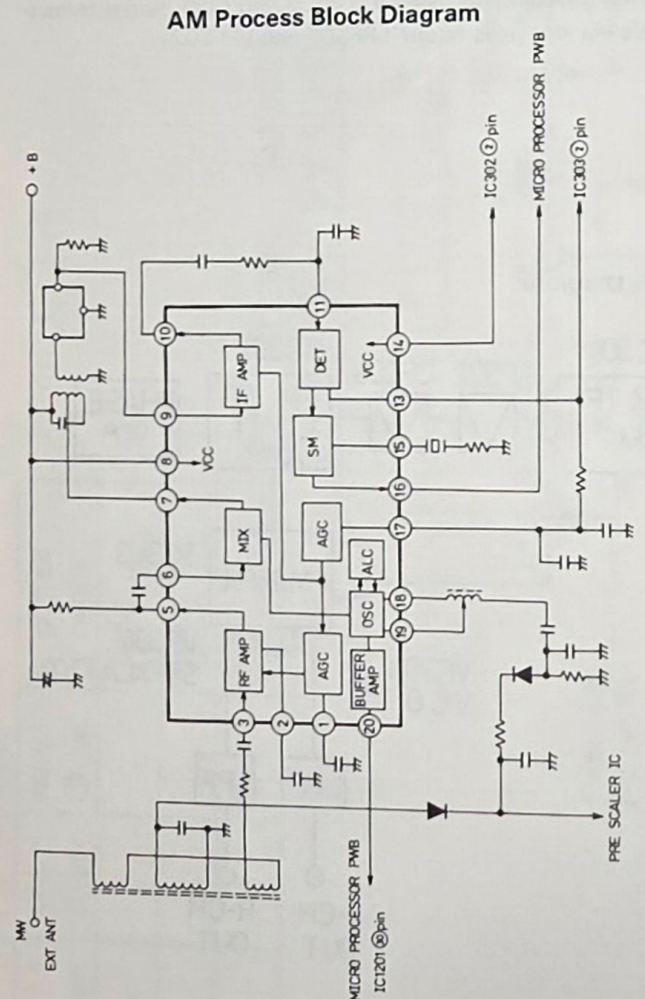

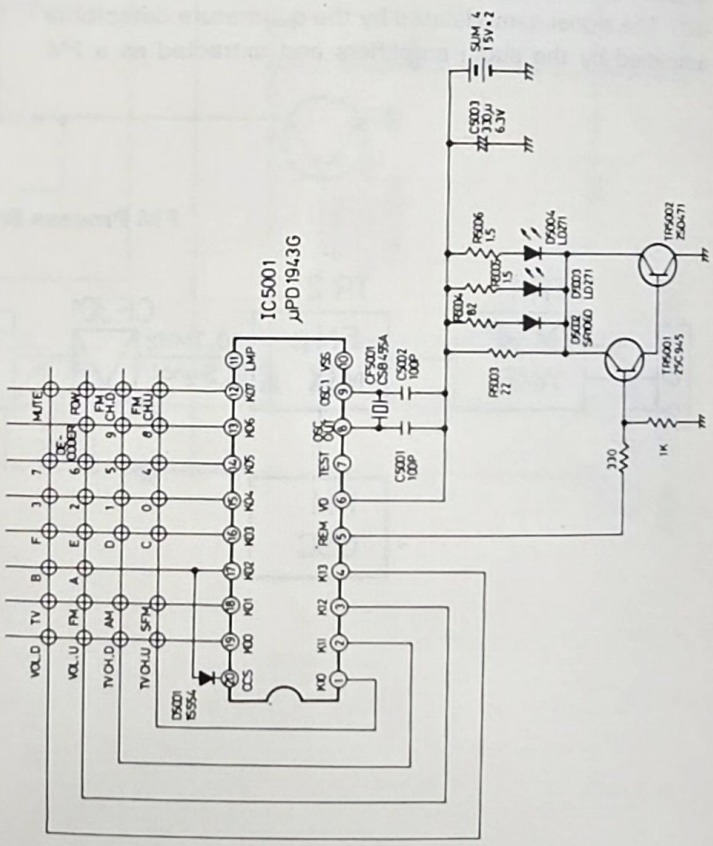

4. Audio Circuit

Pin 7 output (L-channel) of the IC switching circuit
Pin 1 output (R-channel) of the IC switching circuit

○ The outputs from the IC switching TG terminals (1:L-channel, 3:R-channel) (all the audio signals are output from here) are input to the audio terminal TG.

• Audio terminal

(1) When both the Synthetic Stereo Switch and the Acoustic Enhance Switch are in the OFF position, the signals at TG1 and TG2 are directly input to the audio switch of IC815.

(2) When the Acoustic Enhance Switch is in the ON position and the Synthetic Stereo Switch is in the OFF position, the sound field of the stereo signal is further expanded.

Explanation of the TG1 of the stereo input (see Fig. 1)
The R-channel component is attenuated and reversed in phase by IC805 before being output.
When this signal is mixed with the L-channel component in IC806, the sound field will deviate outside.
The equalization circuit surrounding IC807, i.e., R857 and C833, generates a particular frequency response to correct the sound field.
The signal which is corrected in the sound field is input to the audio switch IC815.

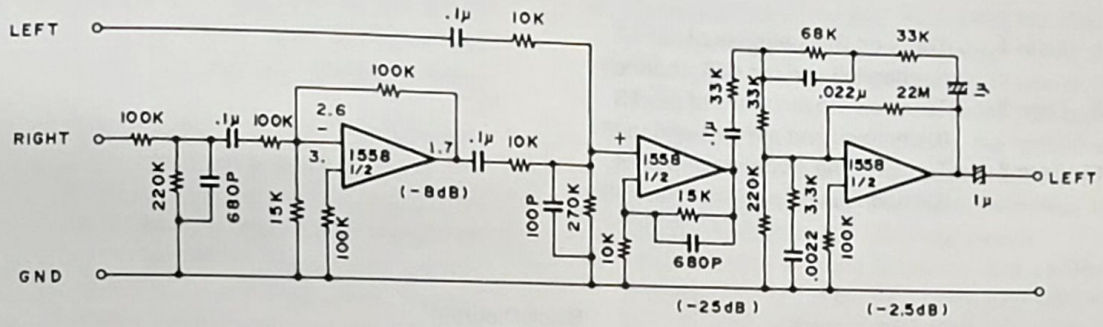

Fig. 1

FREQUENCY RESPONSE (dB)

	25 Hz	50	100	125	250	500	1K	2K	4K	8K	16K	20 kHz	
CH 1.	+3.5	+6.3	+6.3	+5.8	+3	+1	0	+0.3	+1.2	+2.3	+2	+2	Sound field response
CH 2.	+3.5	+6.2	+6.2	+5.7	+3	+0.8	0	+0.3	+1.5	+2.5	+2	+1.5	

(3) When the Synthetic Stereo Switch is in the ON position and the Acoustic Enhance Switch is in the OFF position (The Acoustic Enhance Switch should be set to OFF at this time.), the Synthetic Stereo Switch provides the monaural signal with stereo effect.
The monaural component of the signals at TG1 and TG3 are cancelled by the Synthetic Switch. One signal is input to pin 5 and pin 3 of IC801 where it is separated. The output from pin 7 is output to the L- and R-channel Synthetic Stereo Switch respectively. The output from pin 1 is input to pin 3 of IC802 where its phase is delayed by the influence of the oscillation circuit IC803, and output from pin 8. The output signal is fed to pin 2 of IC804. The output from pin 1 is mixed with the output signal from pin 7 of IC801 and fed to the Audio Switch IC815. The output from pin 1 is at the same time negatively fed back to pin 6 of IC804 (R803 180 kΩ serves as a negative feedback circuit). The output from pin 7 is mixed with the output signal from pin 7 of IC801 and applied to the Audio Switch IC815. In IC804, the output from pin 1 and the output from pin 7 are 180° out of phase from each other, giving the impression that the monaural signal is separated.
The Audio Switch IC815 is an IC switch which drives the DNR (Dynamic Noise Reduction) IC808.

Definitions of IC switch IC815

L	Pin 14 SW	Pin 13 SW	Pin 11 SW
R	Pin 1 SW	Pin 2 SW	Pin 4 SW
DNR OFF	ON	OFF	OFF
DNR ON	OFF	ON	ON

(1) When the DNR switch is OFF (TR812 is OFF)
The audio signals input to pin 14 (L-channel) and pin 1 (R-channel) are applied to the main amplifier via pin 2 (L-channel) and pin 3 (R-channel).

(2) When the DNR switch is ON (TR813 is ON)
The DNR (Dynamic Noise Reduction) filters out higher frequencies to attenuate hissing noise when the input level is low.

When the DNR switch turns on, TR812 is turned on, which inputs a signal to pin 7 (gate 1), pin 6 (gate 2) and pin 9 (gate 3).

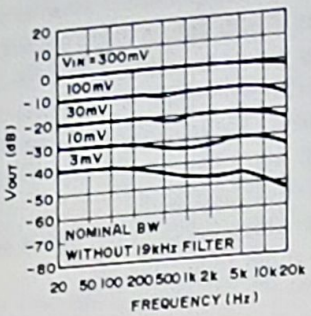

I. Gate 1 ..... Turns on the switches of pin 11 (L-channel) and pin 4 (R-channel)

II. Gate 2 ..... Turns on the switches of pin 13 (L-channel) and pin 2 (R-channel)

III. Gate 3 ..... Turns off the switches of pin 14 (L-channel) and pin 1 (R-channel)

Therefore,the audio signal which are input to pin 11 (L-channel) and pin 4 (R-channel), (pin 14 and pin 1 switches are off), pass through the switch. The signals output from pin 10 (L-channel) and pin 5 (R-channel) are input to pin 13 (L-channel) and pin 2 (R-channel) of DNR circuit IC808.

The degree of filtering of the DNR can be adjusted by control VR801 and the outputs are taken from pin 11 (L-channel) and pin 4 (R-channel) and enter pin 13 (L-channel) and pin 2 (R-channel) of IC815. The signals pass through the switch and are output from pin 12 (L-channel) and pin 3 (R-channel) and fed to the main amplifiers IC809 (L-channel) and IC810 (R-channel).

Block Diagram
NFB

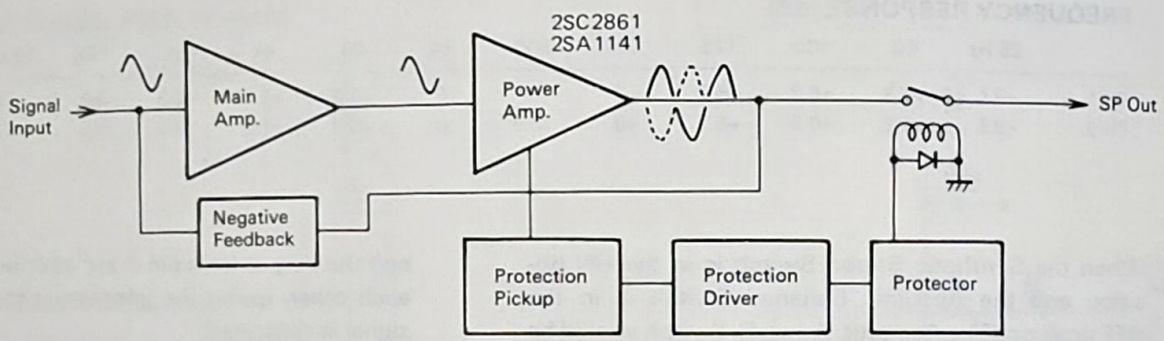

The signal input to pin 4 and the signal negatively fed back from pin 5 are applied to the differential amplifier and output from pin 11 and pin 12, then amplified by the power amplifier and applied to the speakers. (The power amplifier operates in class B operation.)

When an excessive current flows through the power amplifier, a bias voltage is applied to TR807 (L-channel), and TR808 (R-channel) with the result that they turn on (protection pickup). This causes the protection driver TR809 to turn on, which in turn allows protector IC813 to output voltage from pin 6. This voltage actuates the solenoid to turn off the relay circuit switch, so no current flows through the speakers.

Driving the volume control

The volume level is turned up or down by applying the signals from the microprocessor citcuit to pin 5 and pin 6 of the motor drive circuit IC814.

* The HP amplifier circuit is switched by the HP selector. The output of the amplifier is input from HD (L-channel) and HD3 (R-channel) and the input levels are varied by VR806 before being fed to pin 3 & 4 (L-channel) and pins 11 & 12 (R-channel) of IC802 where the signals are amplified and then applied to HP jacks from pin 6 (L-channel) and pin 9 (R-channel).

5. IC Switching Circuit

(1) The signal at VIDEO 1 INPUT terminal is input to the TV IF circuit via terminal J1.

(2) The signal at VIDEO 1 OUTPUT terminal is output from the TV IF circuit via terminal J3.

(3) The signal at VIDEO 2 INPUT terminal is input to the TV IF circuit via terminal J5.

(4) The L- and R-channel signals at VIDEO 1 INPUT terminals are fed to pin 11 (L-channel) and pin 4 (R-channel) of IC553 and output from pin 10 (L-channel) and pin 6 (R-channel), and branched: one is output to L and R channels of the TAPE OUTPUT terminals respectively and the other is fed to pin 5 (L-channel) and pin 3 (R-channel) of IC559 where both signals are converted in impedance and output from pin 7 (L-channel) and pin 1 (R-channel) to the AF circuit via terminal TG1 (L-channel) and TG3 (R-channel) respectively.

(5) The L- and R-channel signals at VIDEO 2 INPUT terminals are fed to pin 13 (L-channel) and pin 2 (R-channel) of IC552 and output from pin 12 (L-channel) and pin 3 (R-channel), and branched: one is output to L- and R-channels of TAPE OUTPUT terminals respectively and the other is fed to pin 5 (L-channel) and pin 3 (R-channel) of IC559 where both signals are converted in impedance and output from pin 7 (L-channel) and pin 1 (R-channel) to the AF circuit via terminals TG1 (L-channel) and TG3 (R-channel) respectively.

(6) The L- and R-channel signals at the PHONO terminals are input to pins 3 (L-channel) and 5 (R-channel) of the equalizing circuit (EQ) of IC811 in the AF circuit via TE1 (L-channel) and TE3 (R-channel) and output from pins 1 (L-channel) and 7 (R-channel). The signals returned from terminals TF1 (L-channel) and TF3 (R-channel) are input to pin 11 (L-channel) and pin 4 (R-channel) of IC551 and output to pin 5 (L-channel) and pin 3 (R-channel) of IC559 from pin 10 (L-channel) of IC559 from pin 10 (L-channel) and pin 5 (R-channel) of IC551. IC559 converts the impedance of the signals and outputs them from pin 7 (L-channel) and pin 1 (R-channel), from when they are applied to the AF circuit via terminals TG1 (L-channel) and TG3 (R-channel). IC551 outputs the signals to L- and R-channel terminals of TAPE OUTPUT from pin 1 (L-channel) and pin 14 (R-channel).

(7) The L- and R-channel signals at the TAPE INPUT terminals are fed to pin 13 (L-channel) and pin 2 (R-channel) of IC551 and output from pin 12 (L-channel), and pin 3 (R-channel), and input to pin 3 (R-channel) and pin 5 (L-channel) of IC559 where both signals are converted in impedance and output from pin 7 (L-channel) and pin 1 (R-channel) to the AF circuit via terminals TG1 (L-channel) and TG3 (R-channel) respectively.

(8) The L- and R-channel signals at the TAPE OUTPUT terminals are output when the function switch is set to any position other than TAPE.

(9) The signals from the tuner are input to pin 14 (L-channel) and pin 1 (R-channel) of IC553 via F1 (L-channel) and F3 (R-channel), and output from pin 12 (L-channel) and pin 3 (R-channel) and input to pin 5 (L-channel) and pin 3 (R-channel) of IC559 where both signals are converted in impedance and output from pin 7 (L-channel) and pin 1 (R-channel) to the AF circuit via TG1 (L-channel) and TG3 (R-channel) respectively.

(10) The input signals to L- and R-channel at VIDEO 1 INPUT are output to L- and R-channels of VIDEO 2 OUTPUT. The input signals to L- and R-channels of VIDEO 2 INPUT are output to L- and R-channels of VIDEO 1 OUTPUT.

- The power for N1 (-15V), N2 (+15V), N3 (GND), N4 (+5V) are supplied to N terminal from the AF PWB.
- The signals is output from the TV IF circuit via terminal J7 and connected to the MONITOR terminal.
- Terminal RCC is connected to the VIDEO circuit and switches the power of monitor ON or OFF.
- Terminal PO outputs the signal switched by the function switch to RF modulator circuit.
- Terminal KP switches functions and controls IC. KP1 (MUTE), KP2 (FM), KP3 (AM), KP4 (TV), KP (VIDEO II), KP6 (VIDEO I), KP7 (PHONO), KP8 (TAPE) and KP9 (GND) terminals each connected to the microprocessor circuit.
- Terminal HW is connected to the H.P SELECTOR and each of HW1 (+B), HW 2 (TV), HW3 (VIDEO 1), HW4 (FM), HW5 (TAPE), HW6 (PHONO) terminal.
- Terminal O is supplied with the monaural signal from the TV IF circuit at 01, and input to pin 2 and pin 13 of IC553 and output from pin 3 and 12, and branched: one is output to L- and R-channels of TAPE OUTPUT terminals respectively and the other is input to pin 5 and pin 3 of IC559 where both signals are converted in impedance and output from pin 7 and pin 1 the AF circuit via terminals TG1 and TG3 respectively.

TROUBLE SHOOTING

VIDEO SECTION

1. Power Fails to Turn ON

- Check Fuse F601 (5A)
  - Blown out — Replace
    - Trouble removed
    - New Fuse also blown out again
      - Defective Transformer
      - Defective secondary power circuit
  - Normal — Check +5V supply voltage at terminal "C3"
    - 0V — Check voltage D602
      - 0V
        - Defective power transformer
        - Defective D602 or it's peripherals
      - Normal — Defective TR602, TR603 or their peripherals
    - Normal — Check voltage at pin 4 of IC1001
      - Normal — Defective TR601 or RL601 or their peripherals
      - 0V — *

* Check voltage at pin 23 through 26 of IC1001
  - +5V (one of them) — Defective Function PWB ASSY
  - 0V — Check wave form at pin 21 of IC1001
    - Normal — Defective IC1001, TR1007 or its peripherals
    - Abnormal — Defective IC1001, R1008 or C1002

2. NO video from Monitor OUT in SIMUL mode (Normal operation in TV and VIDEO mode)

- Check voltage at pin 38 of IC1001
  - Normal — Defective D1003
  - Abnormal — Defective IC1001

3. NO video from Monitor OUT in VIDEO mode (Normal operation in TV and Simul mode)

- Check wave form at pin 8 of IC701
  - Normal — Check wave form at TR702 collector
    - Normal — Defective TR703 or its peripherals
    - Abnormal — Defective TR701, TR702 or their peripherals
  - Abnormal — Defective IC701

4. No video from Monitor OUT in ang mode

Check wave form at pin 8 of IC701

- Normal ——— Defective TR701, TR702, TR703 or thier peripherals
- Abnormal ——— Check voltage at pin 9 of IC701
  - Normal ——— Defective IC701
  - Abnormal ——— Check voltage at TR242 emitter
    - Normal ——— Defective ZD701 or its peripherals
    - Abnormal ——— •

• Check voltage at terminal "EVI"

- Normal ——— Defective TR242 or its peripherals
- Abnormal ——— Defective +22V Line

5. NO signal from TV OUT

Check voltage at terminal "L3"

- Abnormal ——— Defective TR243, TR710 or their peripherals
- Normal
  - Check wave form at terminal "L8"
    - Normal ——— Defective RF Modulator unit
    - Abnormal ——— Defective TR704 or its peripherals

6. NO video from Monitor OUT in TV and SIMUL mode (Normal operation in VIDEO mode)

Is A.N.T. hooked up?

- NO ——— Connect ANT
- YES ——— Check wave form at pin 1 of IC701
  - Normal ——— Defective IC701
  - Abnormal ——— Check wave form at pin of IC201
    - Normal ——— Defective TR201, TR202, TR203 or their peripherals
    - Abnormal ——— Check voltage at pin 13
      - Abnormal ——— Defective +12V line
      - Normal ——— *

* Check voltage at each pin of Tuner Unit

- Normal ——— Check voltage at terminal "AT1" and "AT2"
  - Normal ——— Defective A.N.T. SW. Unit, Tuner Unit, IC201 or their peripherals
  - Abnormal ——— Defective TR711 ~ TR714 or their peripherals
- Abnormal ——— Defective IC1001 and its peripherals or DC supply circuit

7. NO Video from VIDEO 1 OUT (Normal output from Monitor OUT and VIDEO 1 OUT Audio)

Check wave form at TR715 collector

- Normal ——— Defective TR705, TR706, TR707 or their peripherals
- Abnormal ——— Defective TR715 or R725

8. NO audio and video from VIDEO 1 OUT

Check voltage at pin 31 of IC1001

- Normal ——— Defective Video Switch circuit and AUDIO Switch circuit
- Abnormal ——— Defective IC1001 or its peripherals

9. NO audio from VIDEO 2 OUT

How is MONITOR OUT

- NO signal ——— Defective IC1001 or its peripherals
- Normal ——— Defective IC SW PWB ASSY

10. DECODER SW does not work

Check voltage at terminal "SC1" when push DECODER SW on

- +5V ——— Defective S801
- 0V ——— Check Conductivity of TR1001
  - Normal ——— Defective IC1001 or its peripherals
  - Abnormal ——— Defective TR1001

11. Cannot receive CATV channel (Normal receiving TV channel)

Is CATV indicator lighted up?

- NO → Set TV/CATV SW to CATV positon
- YES → Check the upper channel number
  - "83" → Check voltage at terminal "SC5"
    - 0V → Defective S802
    - +5 → Check conductivity of TR1005 or D1102
      - Normal → Defective IC1101
      - Abnormal → Defective TR1105 or D1102
  - "64" → Check voltage at pin 33 ~ 36 of IC1101 by referance to the following chart

Chart 1

CH. No. \ PIN No.	33 (TH4)	34 (TH5)	35 (TH6)	36 (TH7)
2 ~ 6 60 ~ 62	L	L	L	H
7 ~ 13 14 ~ 31 63 ~ 64	L	L	H	H
32 ~ 59	L	H	L	L

- Abnormal → Defective IC1101
- Normal → Check Voltage at terminal "TH4" through "TH7" by reference to Chart 1
  - Normal → Defective Tuner unit
  - Abnormal → Defective Band SW circuit

12. Cannot receive TV channel (Normal receiving CATV channels)

Is TV indicator lighted up?

- NO → Set TV/CATV SW to TV positon
- YES → Check the upper channel number
  - "64" → Check voltage at terminal "SC5"
    - +5V → Defective S802
    - 0V → Check conductivity of TR1005 or D1102
      - Normal → Defective IC1101
      - Abnormal → Defective TR1105 or D1102
  - "83" → Check voltage at pin 33 ~ 36 of IC1101 by referance to Chart 1
    - Abnormal → Defective IC1101
    - Normal → Check voltage at terminals "TH4" through "TH7"
      - Normal → Defective Tuner unit
      - Abnormal → Defective Band SW circuit

13. Scan does work when tune TV channel

Check conductiviry of TR1004 and D1101

- Abnormal → Defective TR1004 and D1101
- Normal → Defective IC1101

14. CH. U/D does not stop at desired channel when Scan SW is ON
Set Scan SW OFF position and select desired channel

Check voltage at pin 41 of IC1101

- Low (less than 2.5 VDC) → Check wave form at terminal "K2"
  - Abnormal → Defective TR204 or its peripherals
  - Normal → Defective SD circuit
- High (over than 2.5V) → Check voltage at terminal "K1"
  - Abnormal → Defective VIF circuit or readjust T202 and T203
  - Normal → *

* Disconnect "K1" and add DC voltage (0 ~ 10V)

Check voltage at pin 7 and pin 1 of IC1102 by reference to Chart II

Chart II

DC \ Pin No.	1	7
2.5	H	L
4.5	L	L
6.5	L	H

- Abnormal → Defective IC1102 or its peripherals
- Normal → Defective IC1101 or its peripherals

15. Blanked Digits or Segments in channel Display

Using a jumper lead, momentarily short from chassis ground to pin 2, 5, 6, 11, 13, 15 and 16 of IC1103 for TV CH. Display (Pin 10 through 16 of IC1205 for FM/AM frequency Display) and to TR1102 collector and TR1104 collector for TV CH. display (Pin 10 ~ 14 of IC1204 for FM/AM frequency display)
Shorting to a pin of IC1103 (that of IC1205 for FM/AM) should illuminate the same segment on all digits. When shorting to TR1102 Collector and TR1104 collector (or pin 10 ~ 14 of IC1204 for FM/AM) a complete digit (⊟) should be illuminated.

- Not all segments and Digits illuminated → Defective VT1101 (VT1201)
- All segments and digits illuminated → Defective F.I.P. driver

16. NO remote Control or erratic remote control

Check to see the LED on the top of transmitter when a button is depressed.

- LED doesn't flash → Replace the batteries or the transmitter
- LED Flashes → Check voltage at terminal "Y1"
  - 0V → Defective +12V Line
  - 12V → *

* Check voltage at terminal "Y2" when a button of transmitter is depressed

- Low → Defective IC1001
- High → Defective photo diode head AMP unit

SOUND SECTION

1. In case of no performance

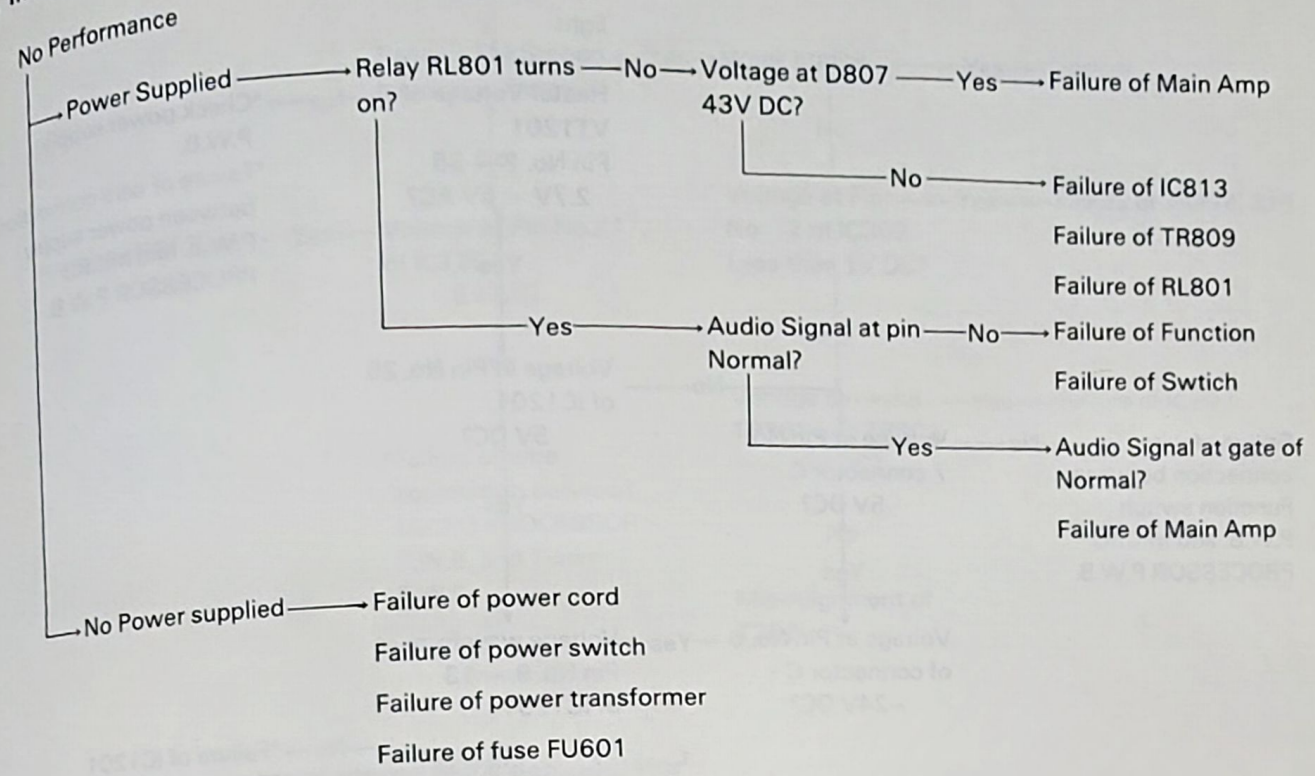

2. Fluorescent Display does not light when Function Switch ("FM/AM") is depressed.

Fluorescent Display VT1201 does not light

↓

Heater Voltage of VT1201 Pin No. 1 ~ 35 2.7V ~ 5V AC? —No→ *Check power supply P.W.B. *Failure of wire connection between power supply P.W.B. and MICRO PROCESSOR P.W.B.

↓ Yes

Voltage at Pin No. 25 of IC1201 5V DC? —No→ Voltage at Pin No. 7 connector C 5V DC? —No→ Failure of wire connection between Function switch P.W.B. and MICRO PROCESSOR P.W.B.

Yes ↓

Voltage at Pin No. 6 of connector C −24V DC? —Yes→ Voltage waveform at Pin No. 9 ~ 13 of IC1201

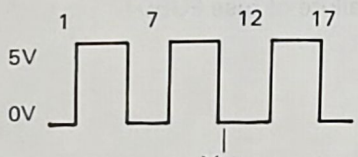

—No→ *Failure of IC1201 *Failure of X1201

↓ Yes

Voltage waveform at Pin No.10 ~ 16 of IC1204, IC1205

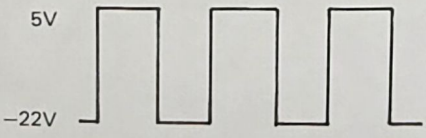

—No→ *Failure of IC1204, 1205

—Yes→ *Failure of VT1201

3. In case of FM Auto Scan, tuning frequency does not stop at the available station.

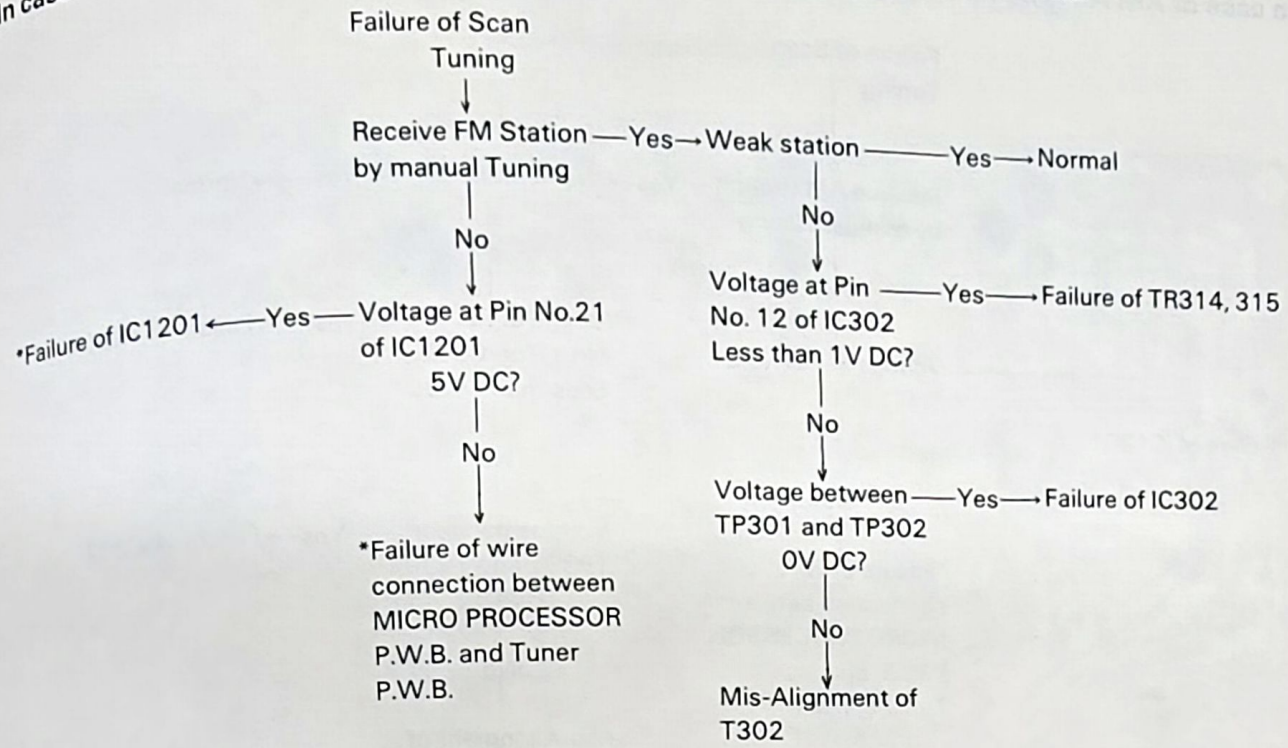

4. Defective operation of stereo MPX demodulator

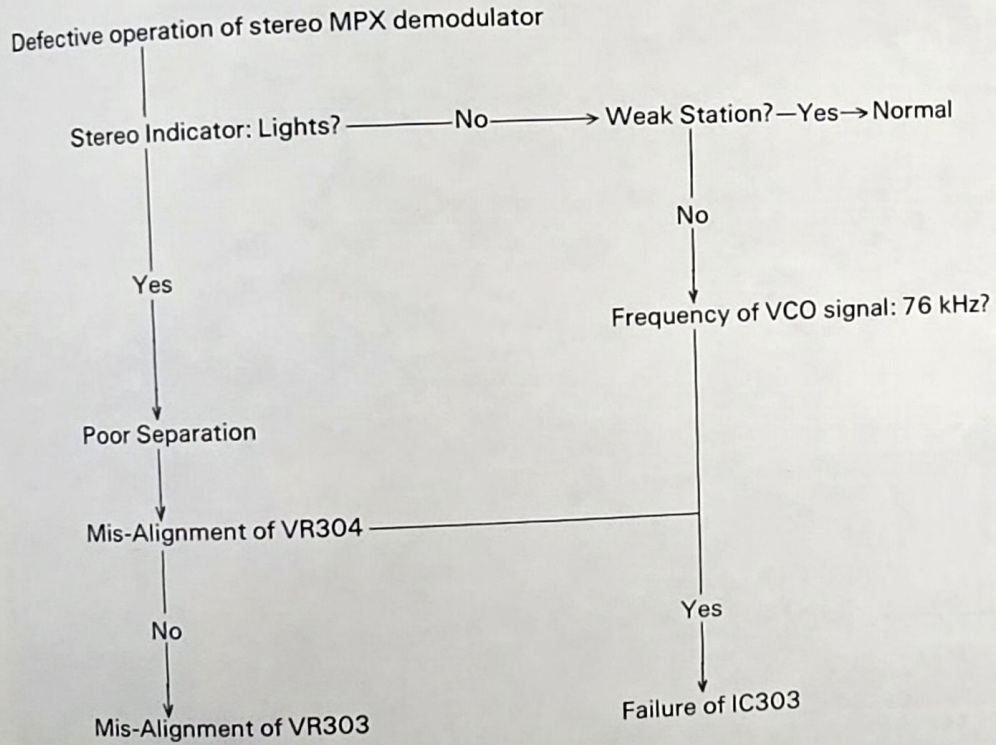

5. In case of AM Auto Scan, tuning frequency does not stop at the available station.

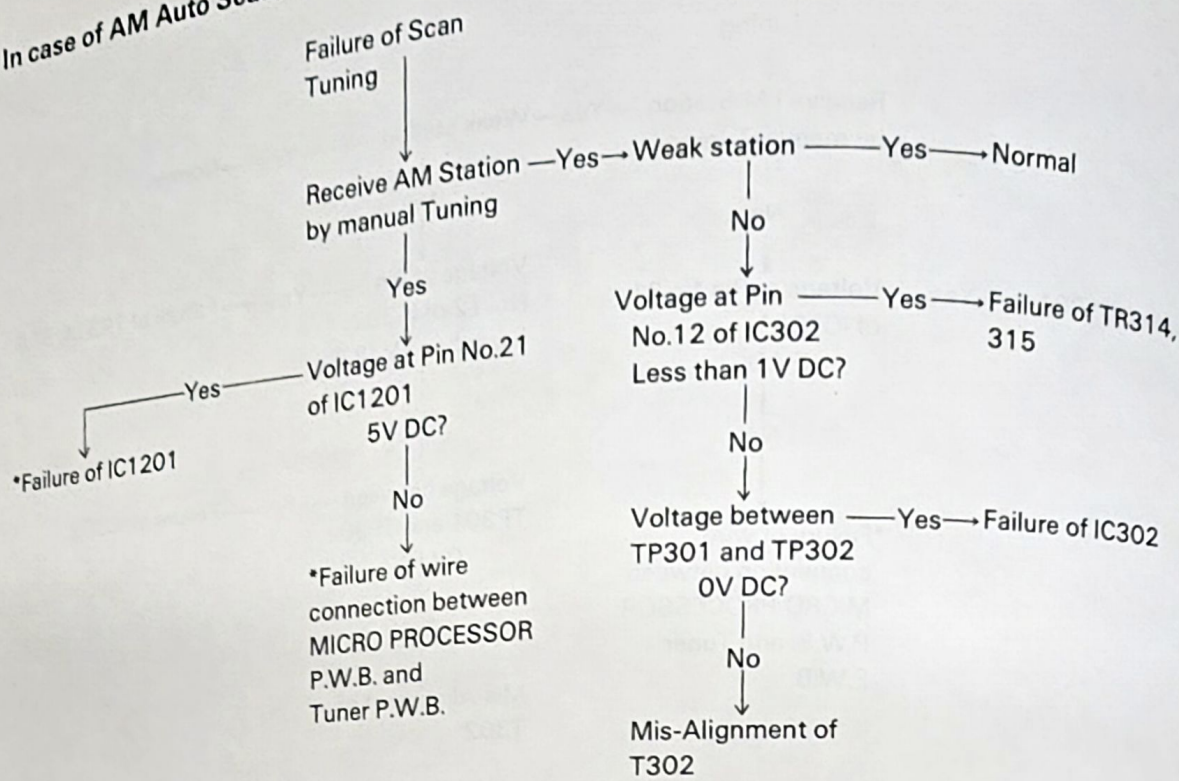

PRINTED BOARD
MICRO PROCESSOR PWB (PWC – 1386)

– Component Side –

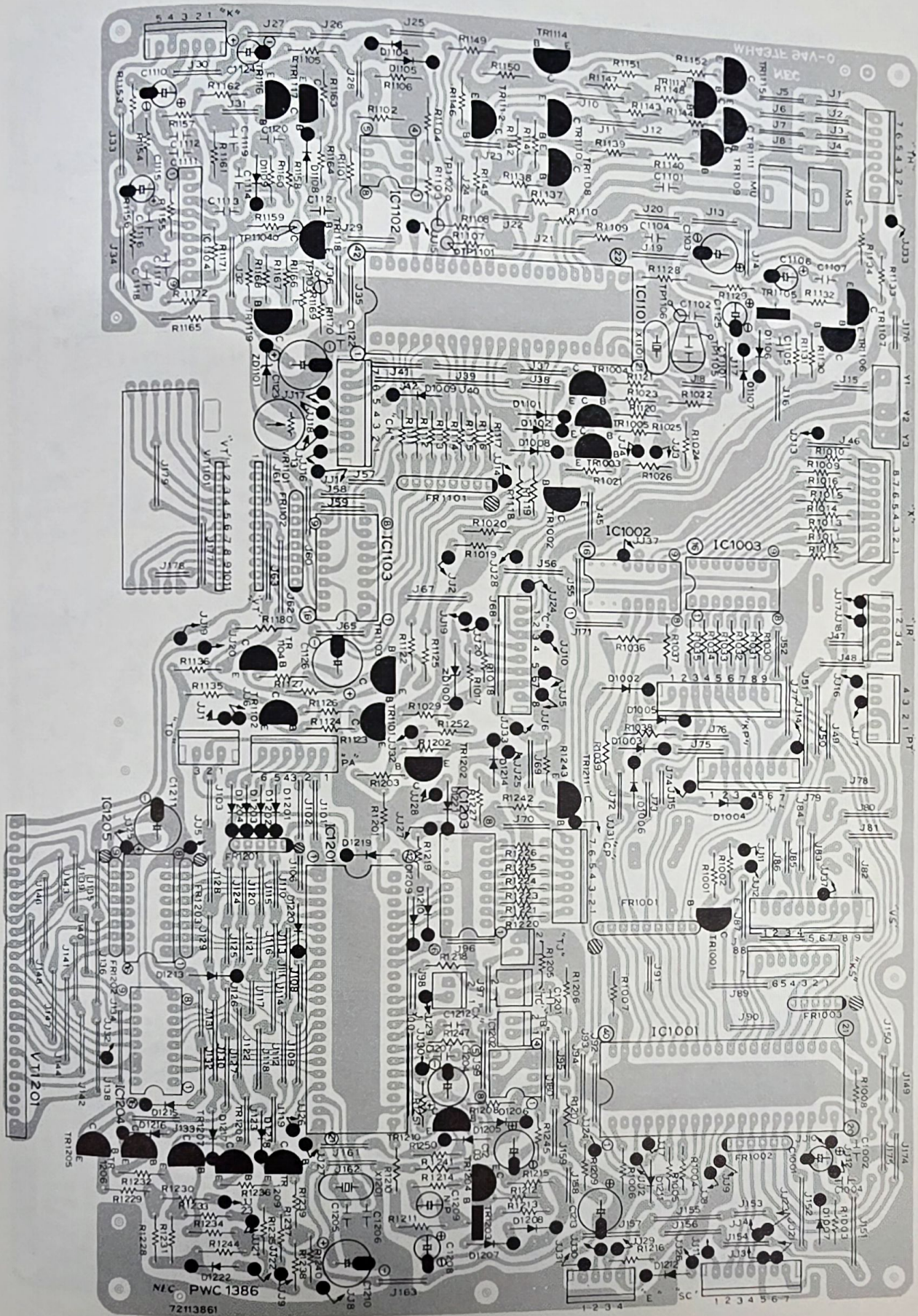

– Solder Side –

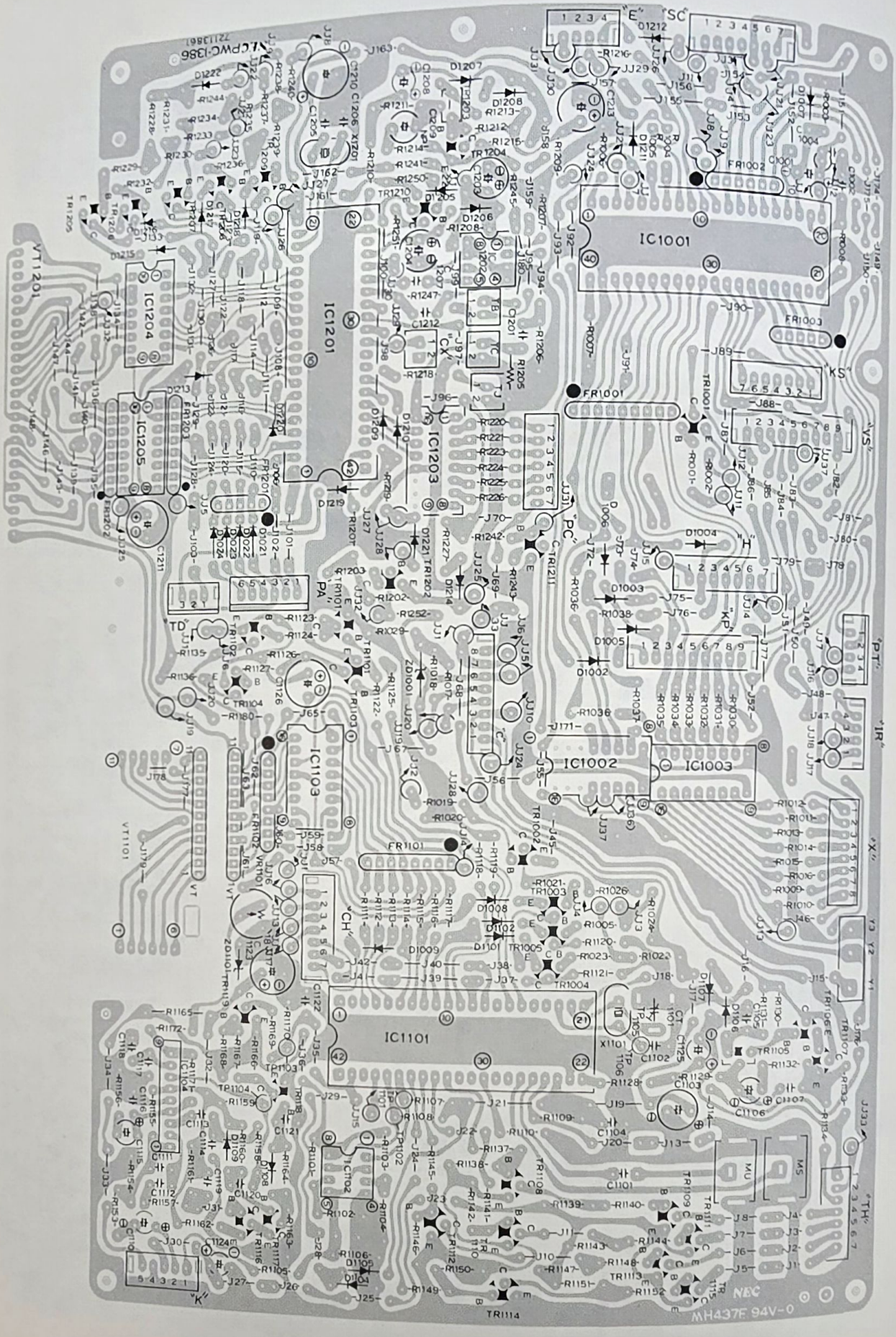
IC1001
IC1201
IC1203
IC1204
IC1205
IC1002
IC1003
IC1101
IC1103
VT1201
VT1101
NEC
MH437F 94V-0

VIF PWB (PWC – 1385)

– Component Side –

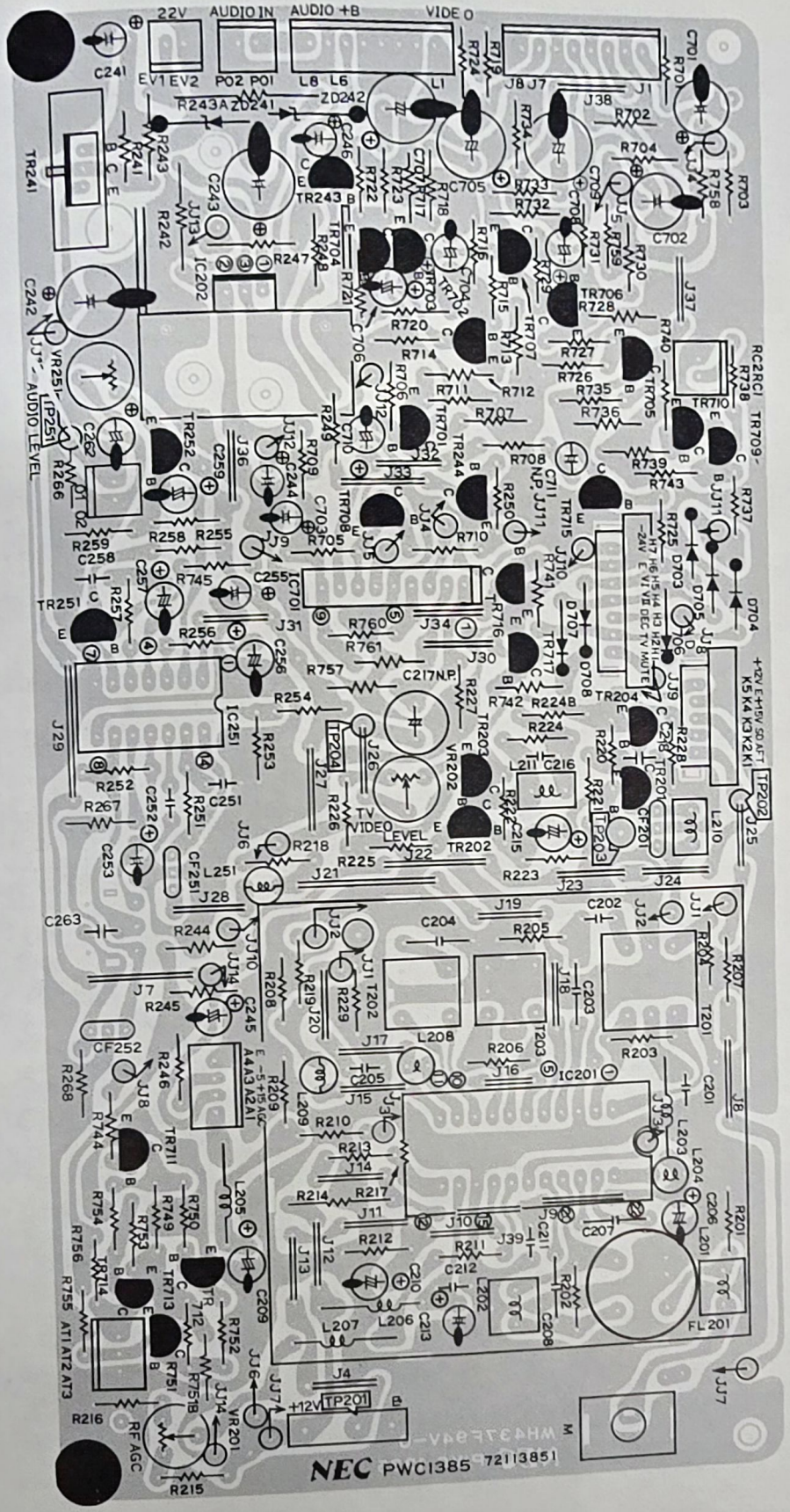

– Solder Side –

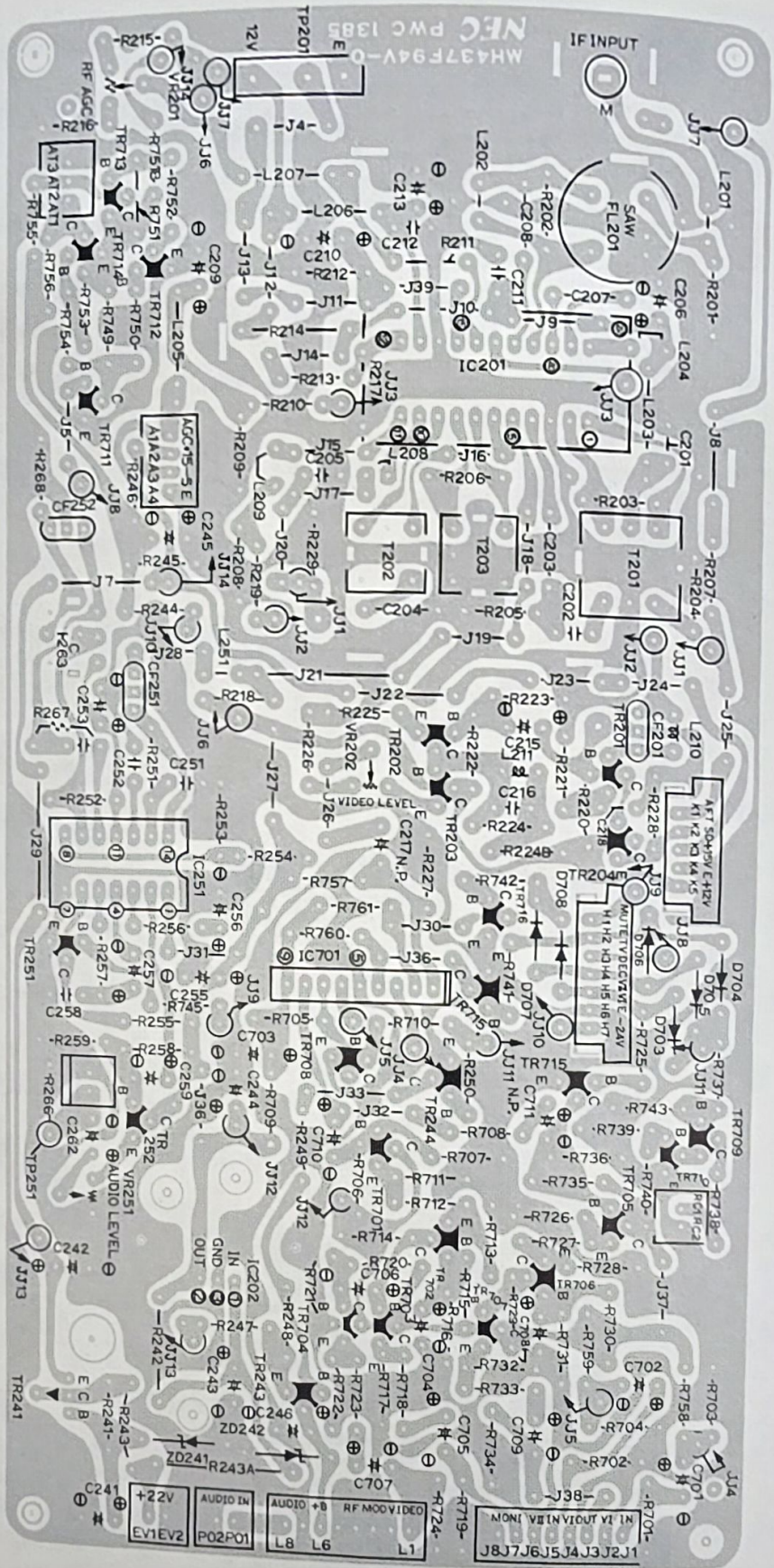
IF INPUT
SAW FL201
IC201
IC701
IC251
IC202
TR201
TR202
TR203
TR204
TR205
TR244
TR245
TR246
TR247
TR248
TR249
TR250
TR251
TR252
TR701
TR702
TR703
TR704
TR705
TR706
TR707
TR708
TR709
TR710
TR711
TR712
TR713
TR714
TR715
TR716
TR241
TR243
T201
T202
T203
L201
L202
L203
L204
L205
L206
L207
L208
L209
L210
L211
D704
D705
D706
D707
D708
ZD241
ZD242
VR201
VR202
VR251
CF201
CF251
CF252
RF AGC
VIDEO LEVEL
AUDIO LEVEL
MUTE TV DECODE -24V
AFT SOAPSW 5 +12V
+22V
AUDIO IN
AUDIO +B
RF MOD VIDEO
MONI VII IN VI OUT VI IN
J8 J7 J6 J5 J4 J3 J2 J1
EV1 EV2
P02 P01
L8 L6 L1

AF PWB (PWC – 1529)

– Component Side –

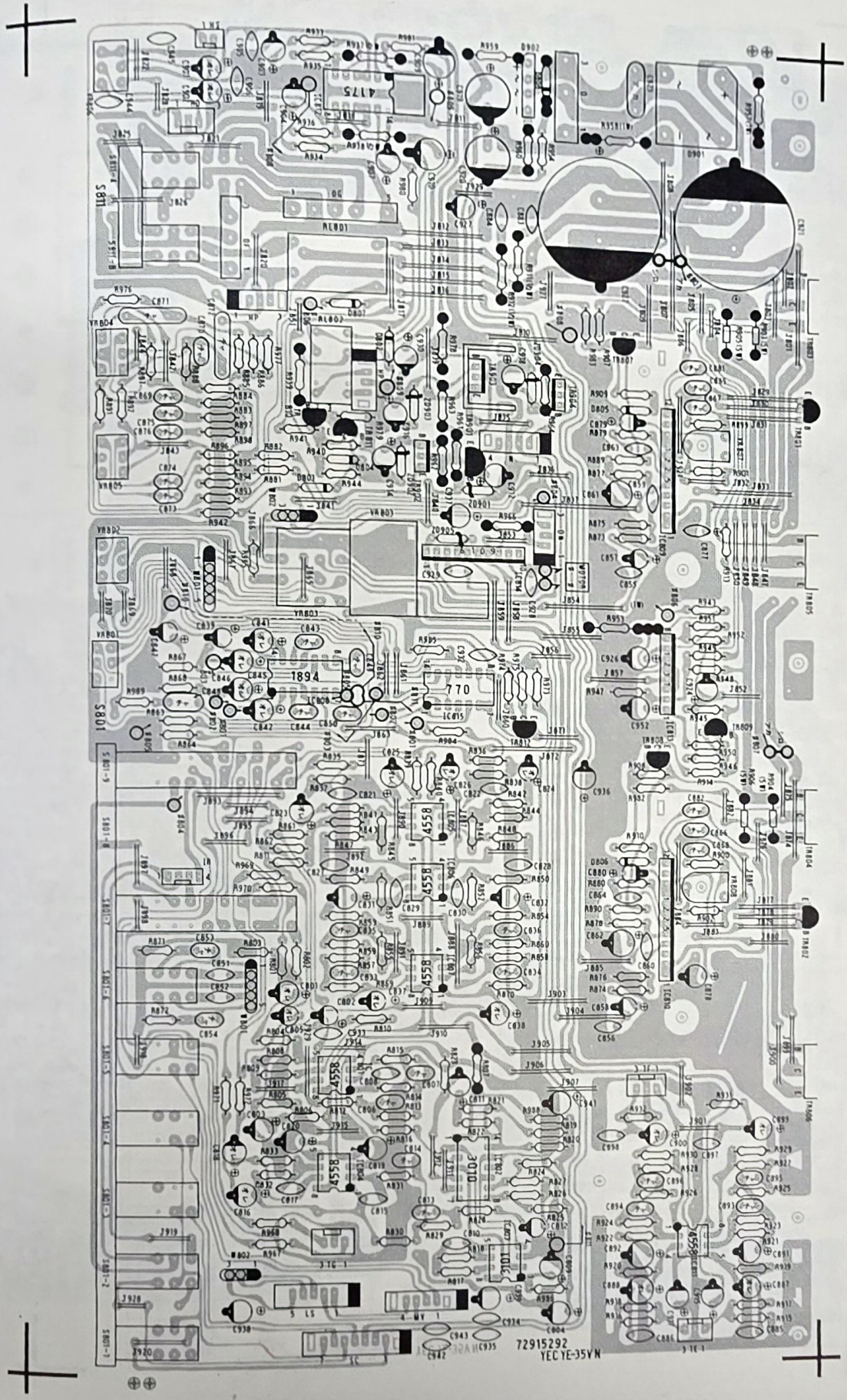

– Solder Side –

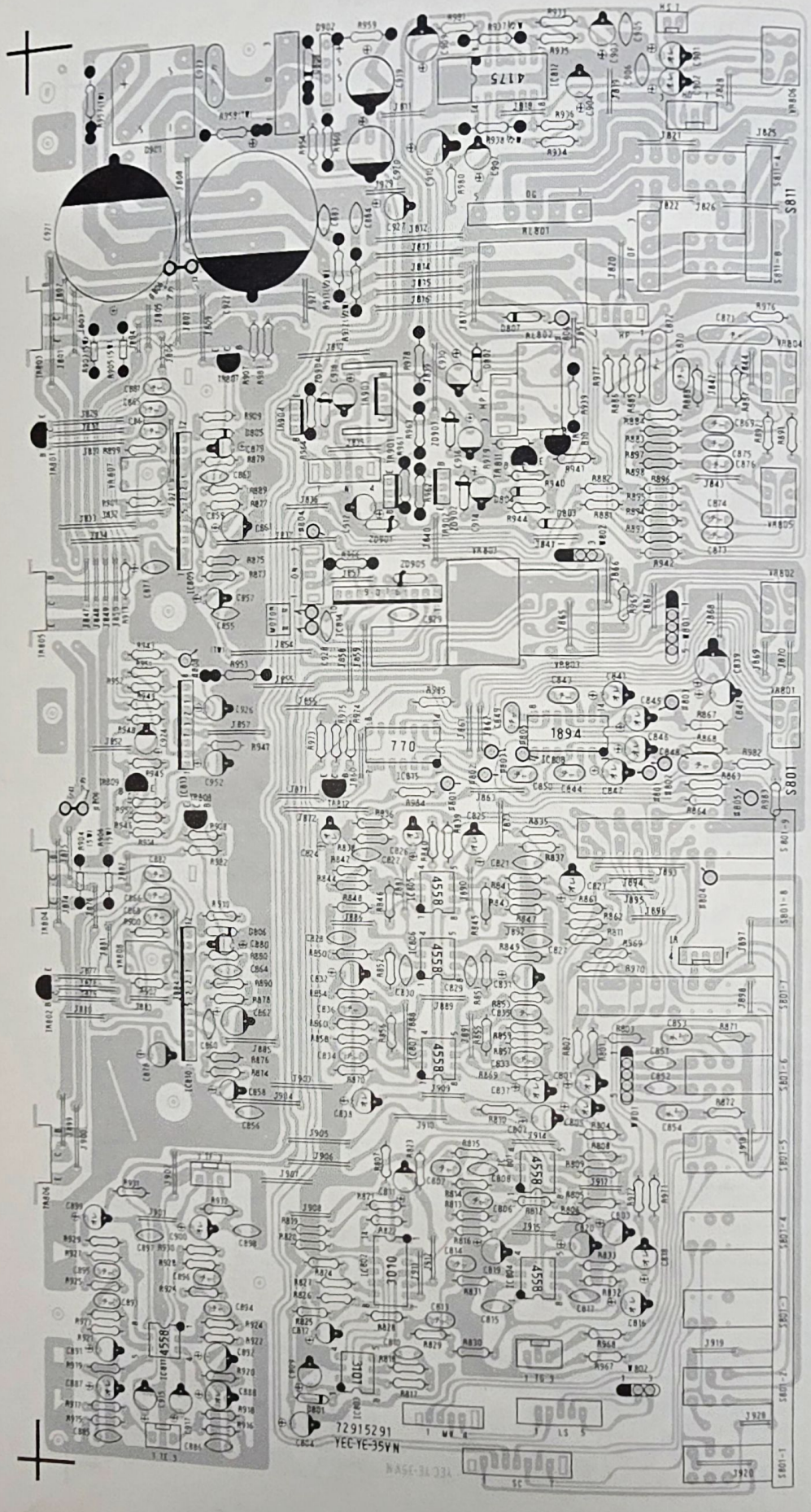

TUNER PWB (PWC – 1536)

– Component Side –

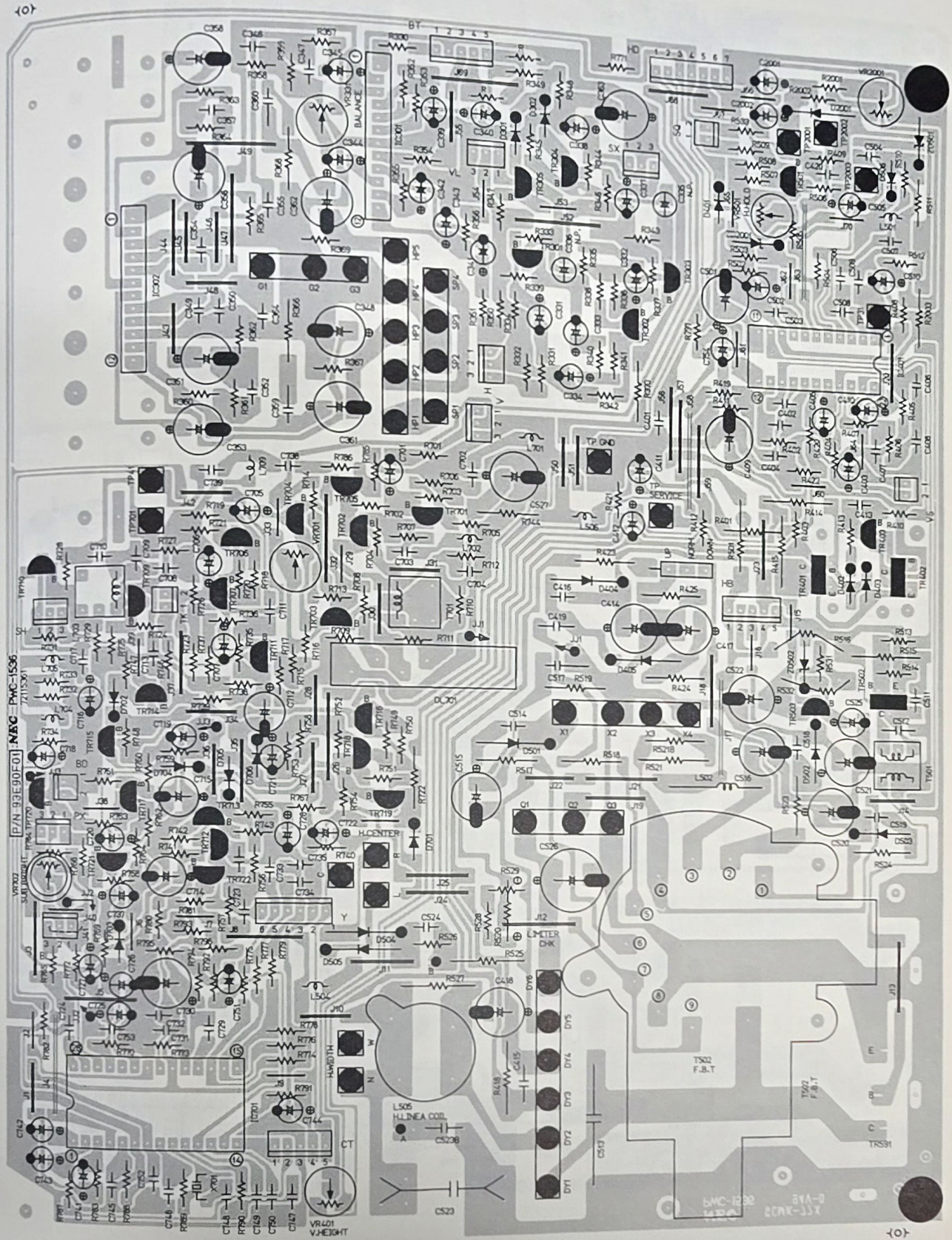

– Solder Side –

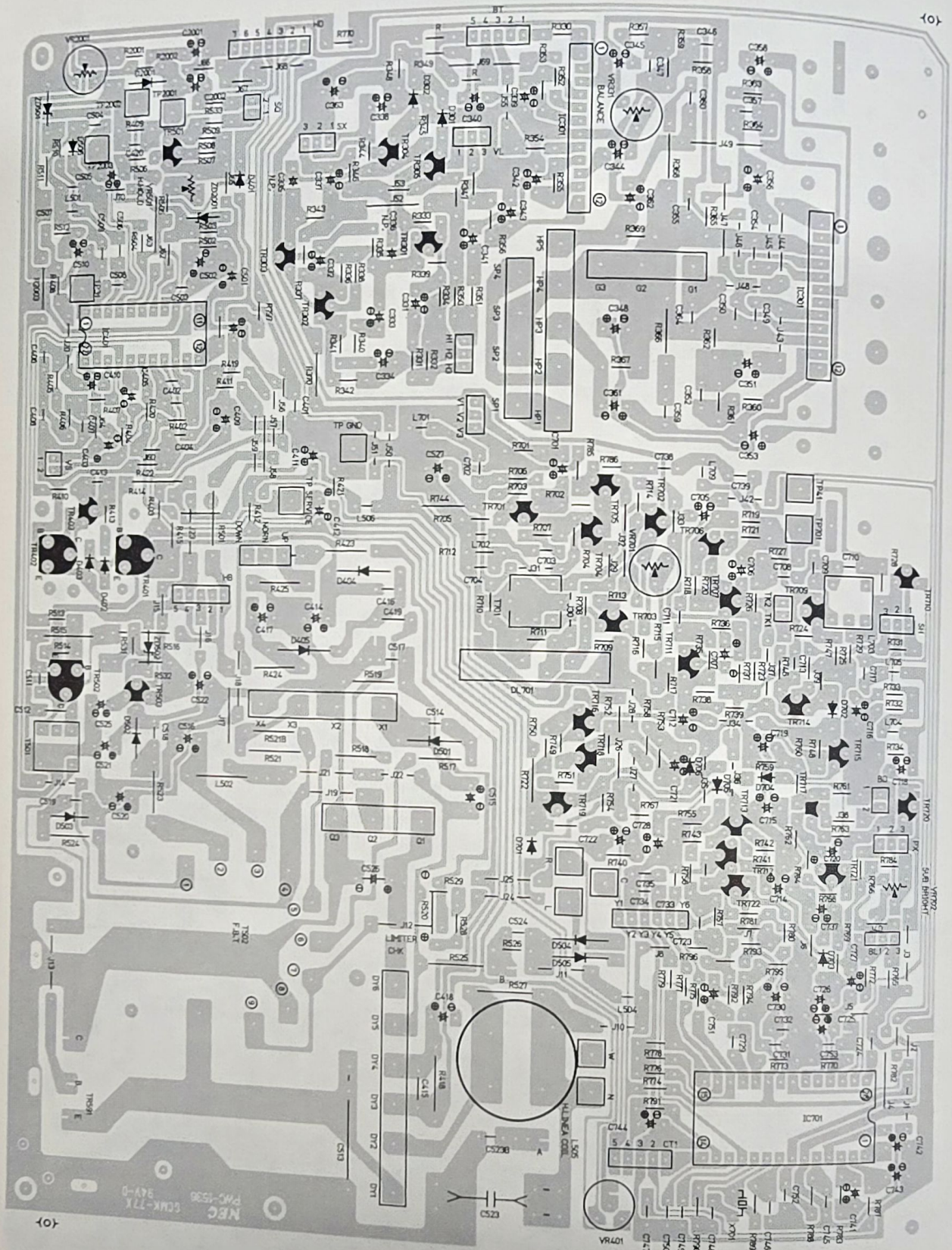

POWER SUPPLY PWB (PWC – 1530)

– Component Side –

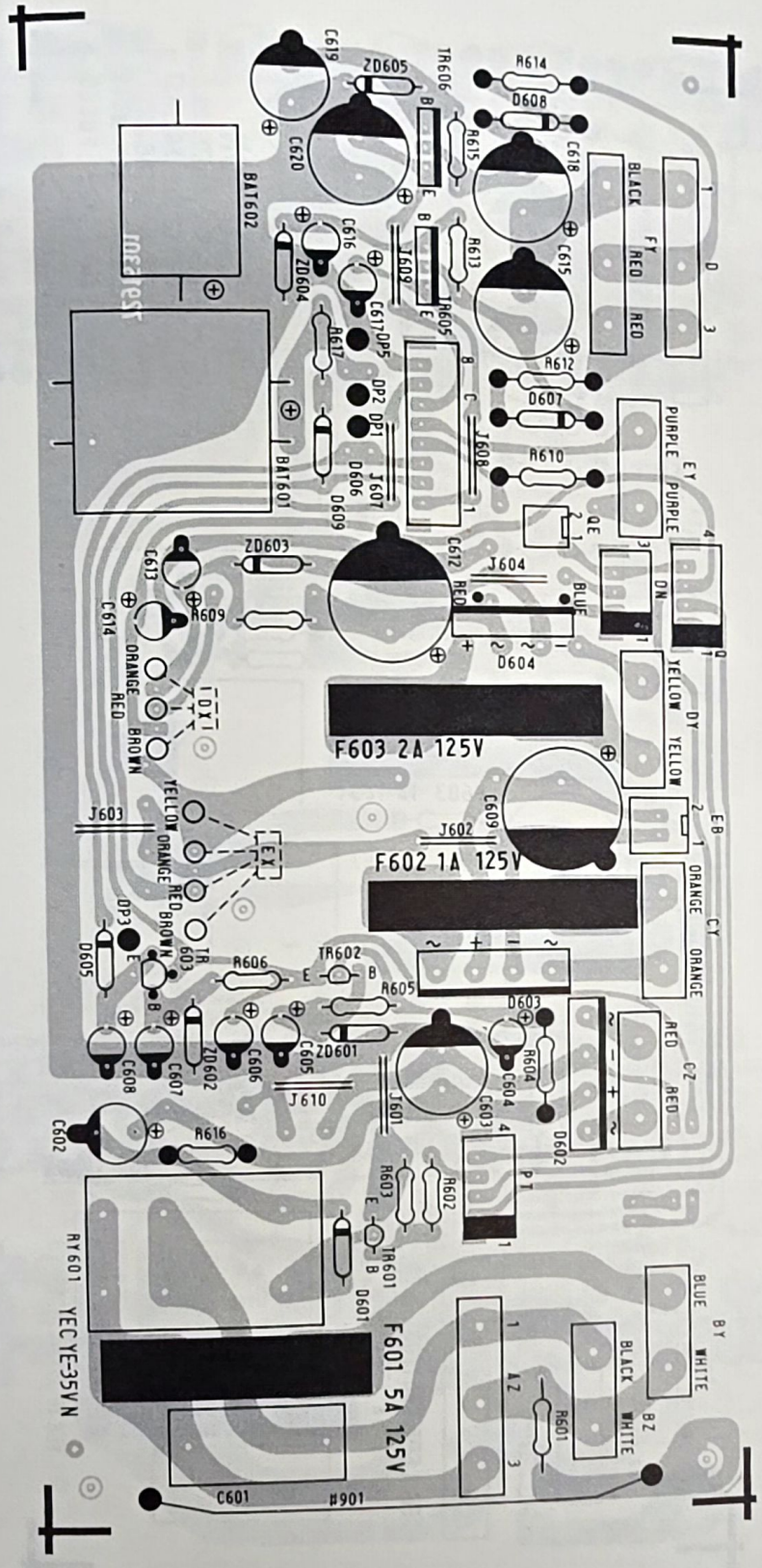

– Solder Side –

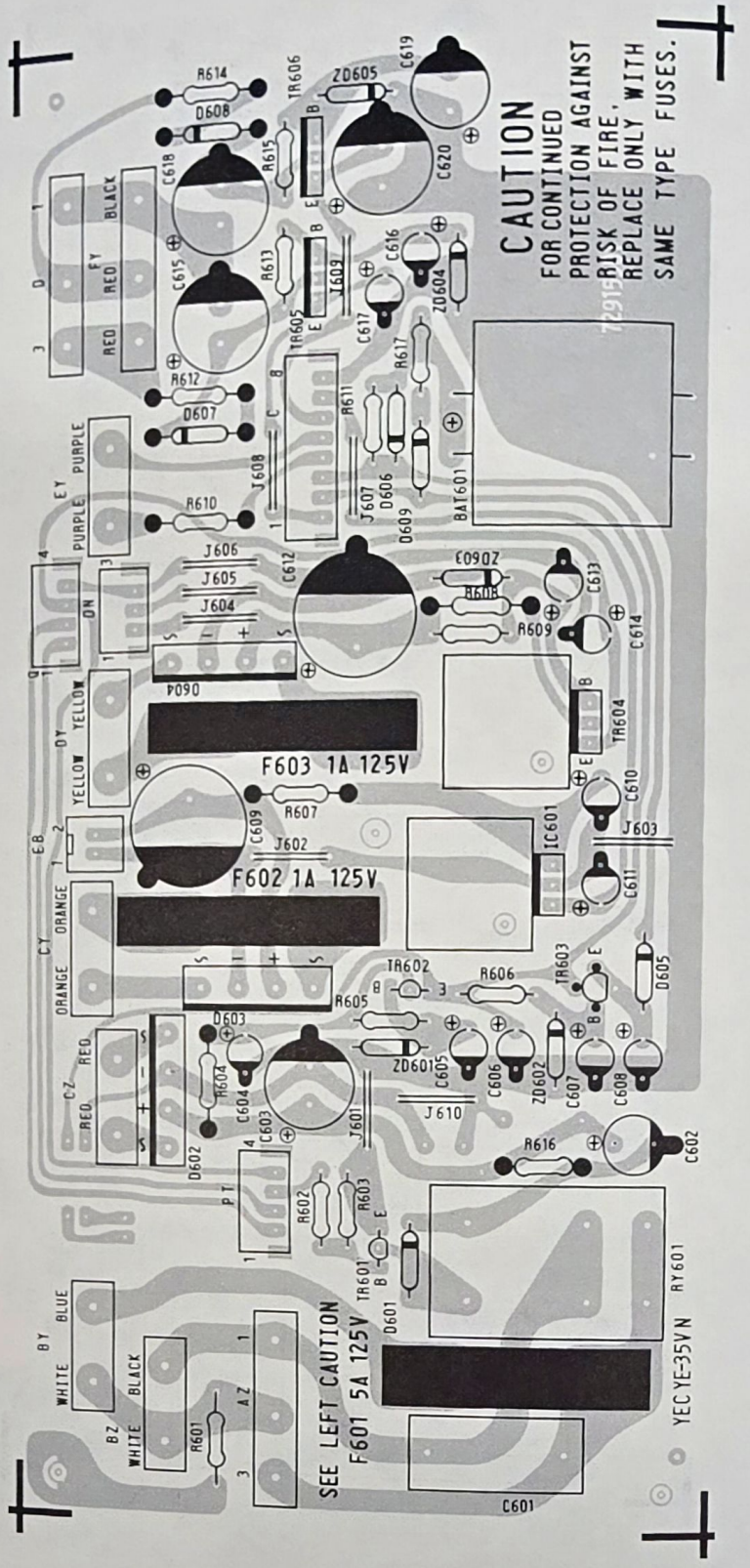
CAUTION
FOR CONTINUED
PROTECTION AGAINST
RISK OF FIRE,
REPLACE ONLY WITH
SAME TYPE FUSES.
F603 1A 125V
F602 1A 125V
SEE LEFT CAUTION
F601 5A 125V
YEC YE-35VN

FUNCTION SW PWB (PWC – 1392)

– Component Side –

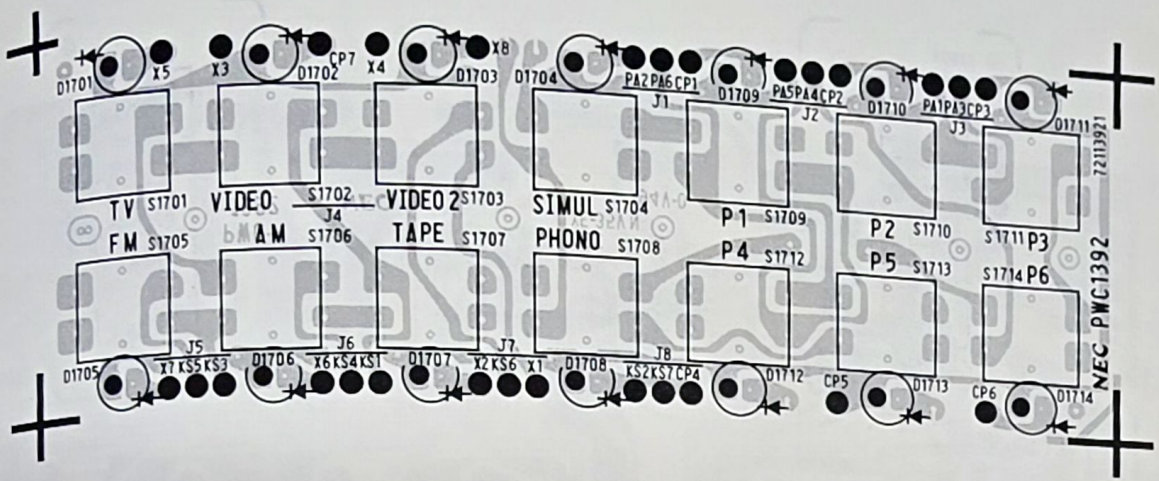

– Solder Side –

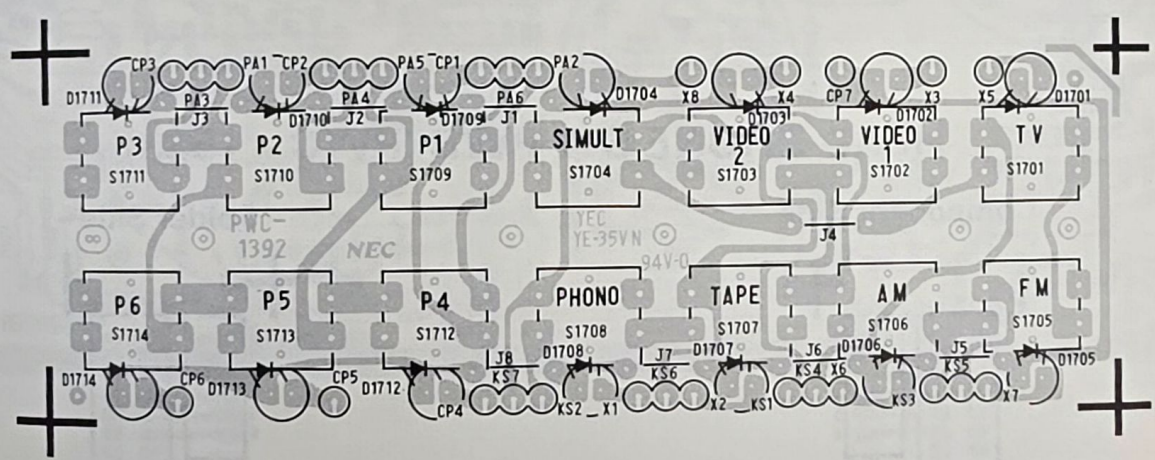

UP/DOWN SW TUNE PWB (PWC – 1442)

– Component Side –

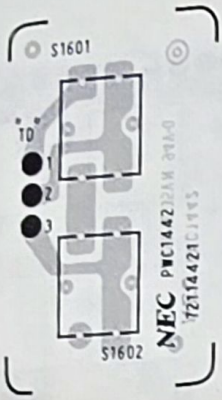

– Solder Side –

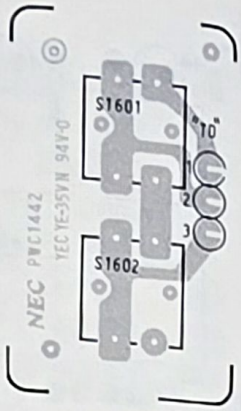

POWER SW PWB (PWC – 1395)

– Component Side –

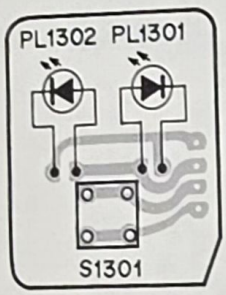

– Solder Side –

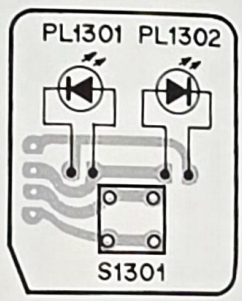

HEAD-PHONE SW PWB (PWC – 1533)

– Component Side –

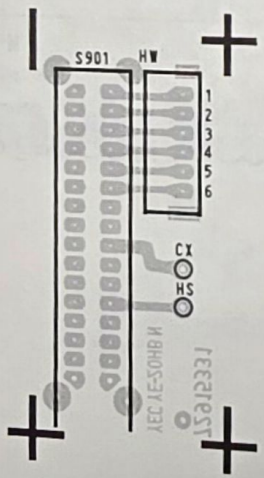

– Solder Side –

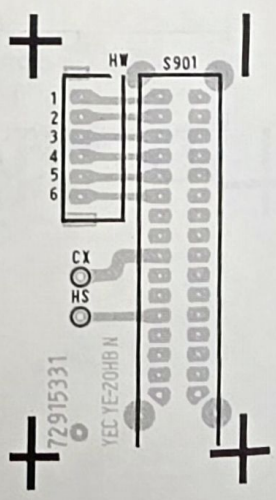

IC SW PWB (PWC – 1531)

– Component Side –

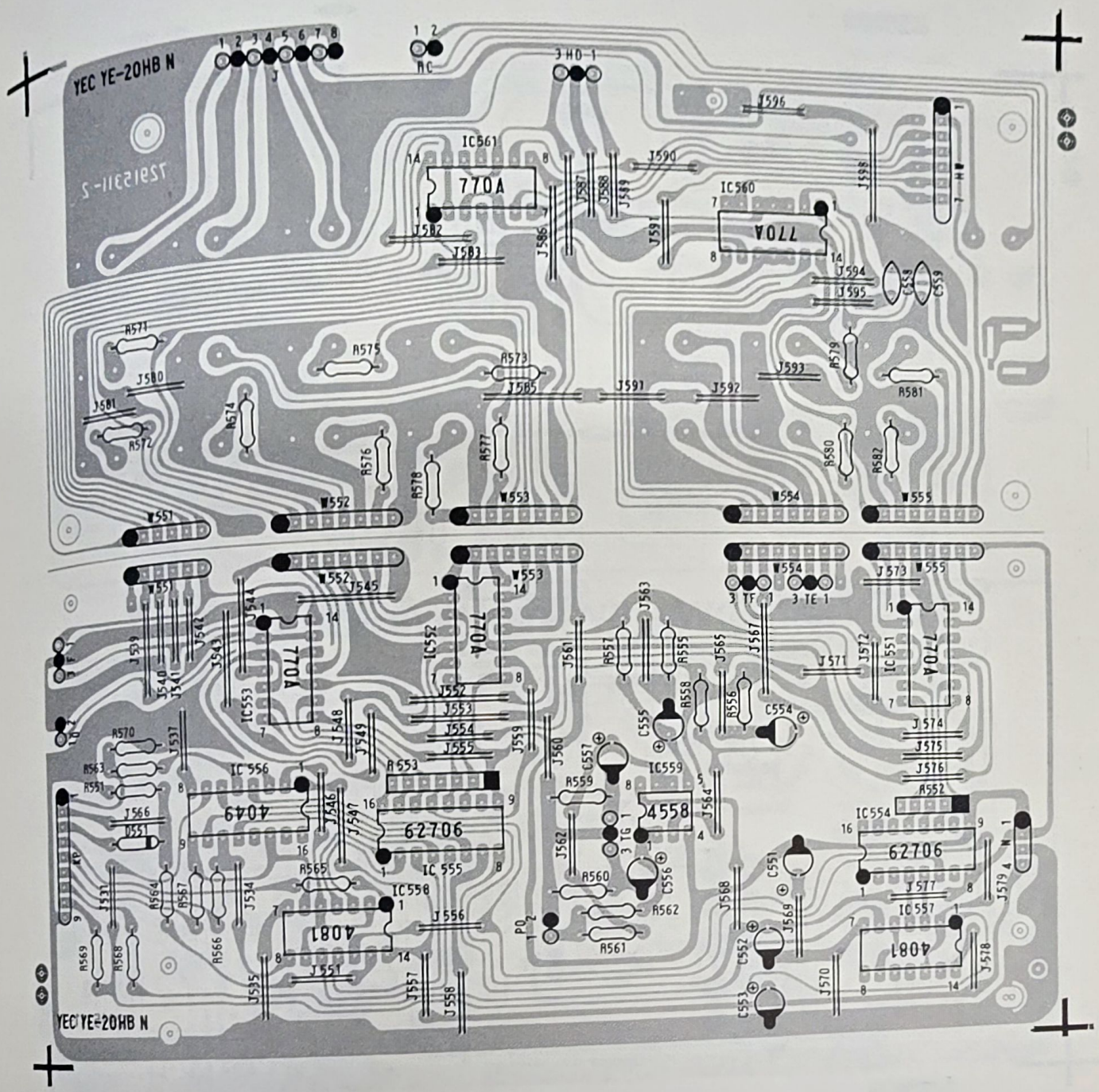

– Solder Side –

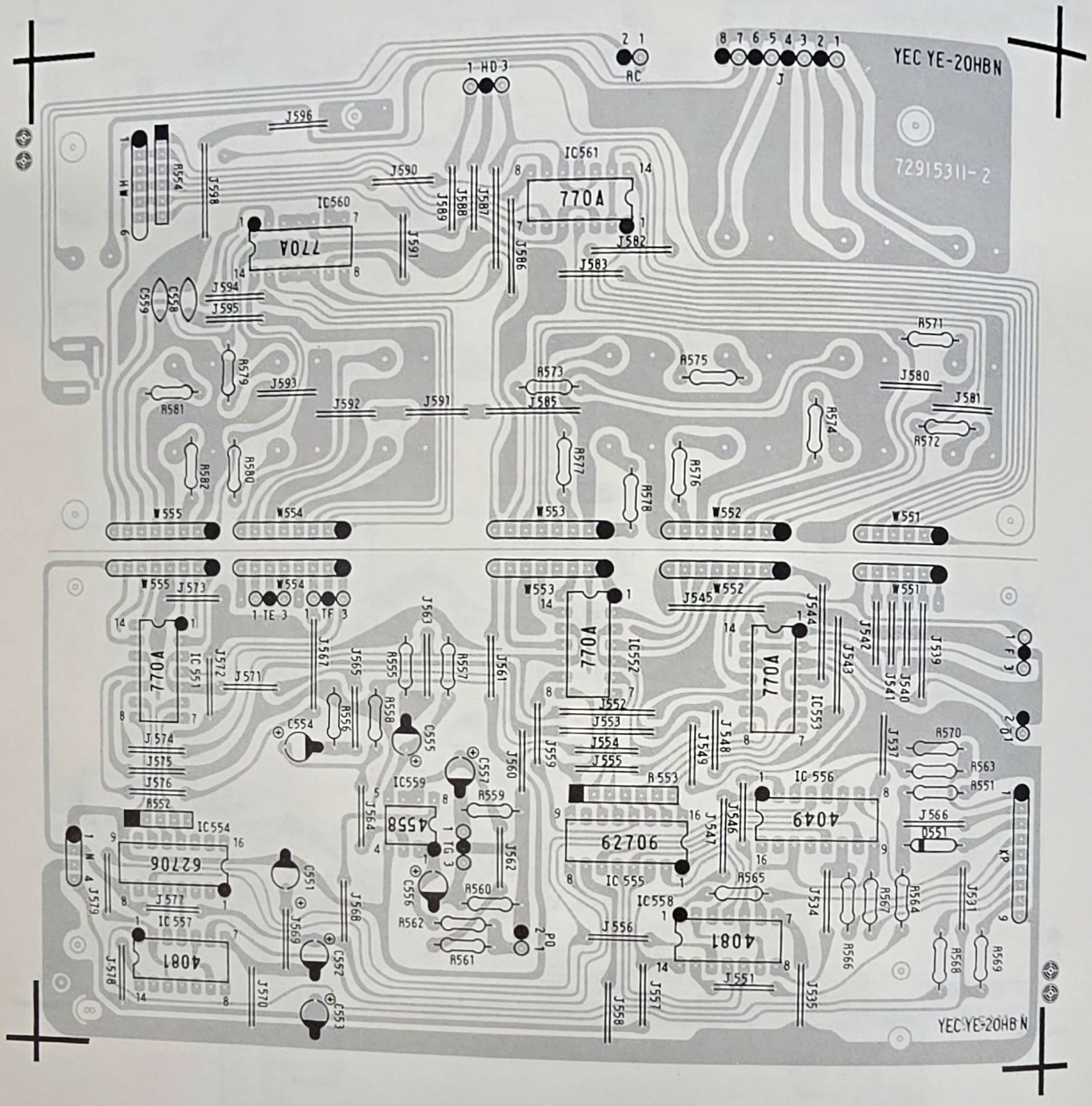
YEC YE-20HBN
72915311-2
770A
IC561
IC560
IC552
IC553
IC554
IC555
IC556
IC557
IC558
IC559
IC551
4558
62706
4049
4081
W555
W554
W553
W552
W551
YEC YE-20HBN

UP/DOWN SW CH PWB (PWC – 1396)

– Component Side –

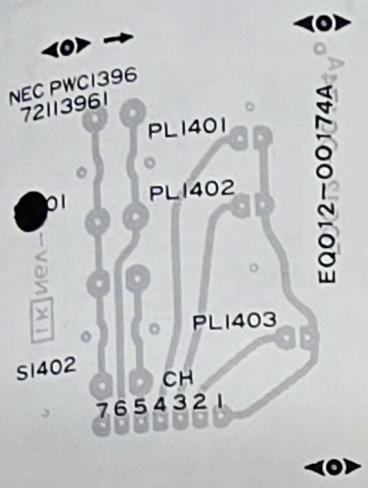

– Solder Side –

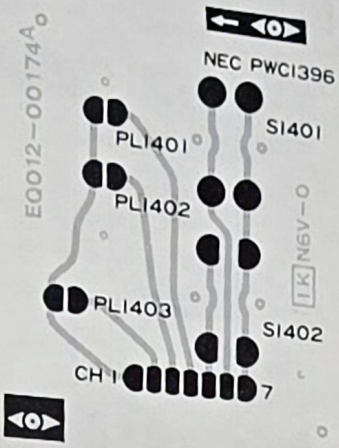

UP/DOWN SW VOL PWB (PWC – 1441)

– Component Side –

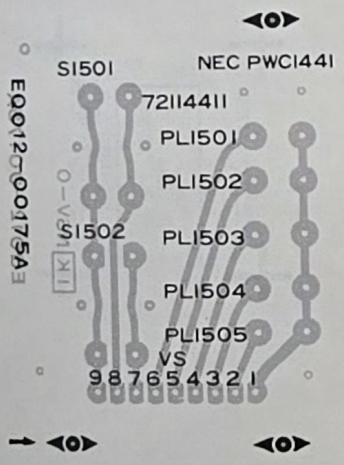

– Solder Side –

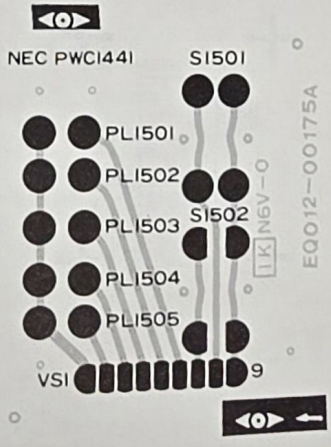

SPEAKER TERMINAL PWB (PWC – 1534)

– Component Side –

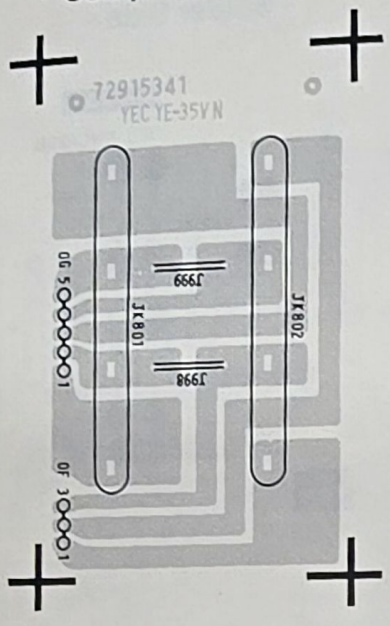

– Solder Side –

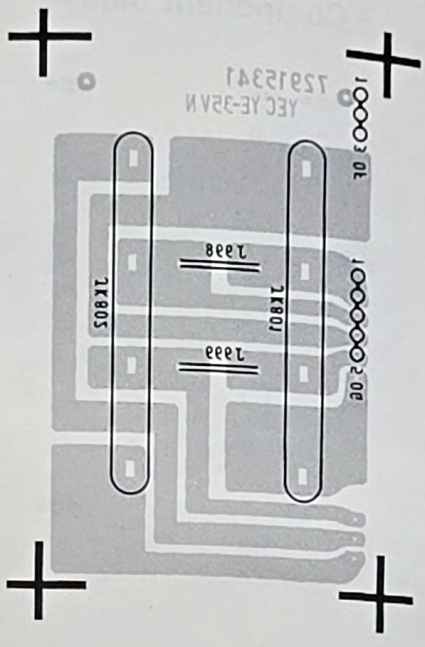

JACK PWB (PWC – 1532)

– Component Side –

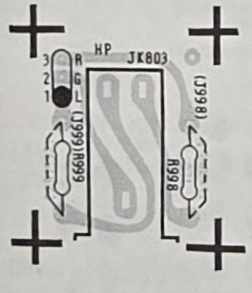

– Solder Side –

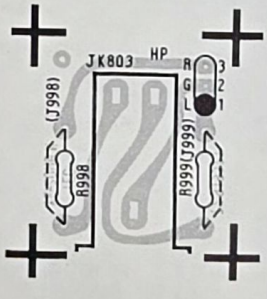

SCHEMATIC DIAGRAM

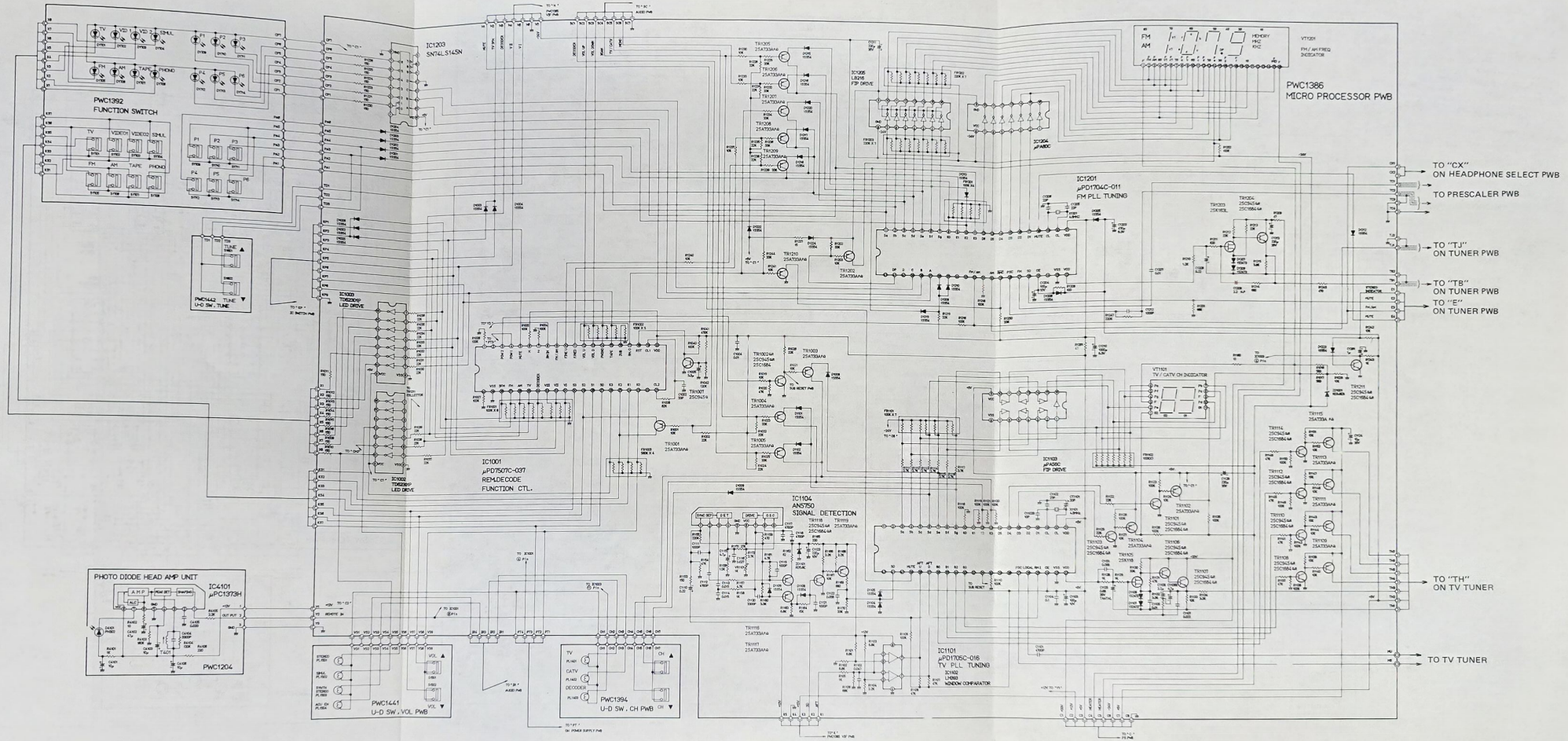

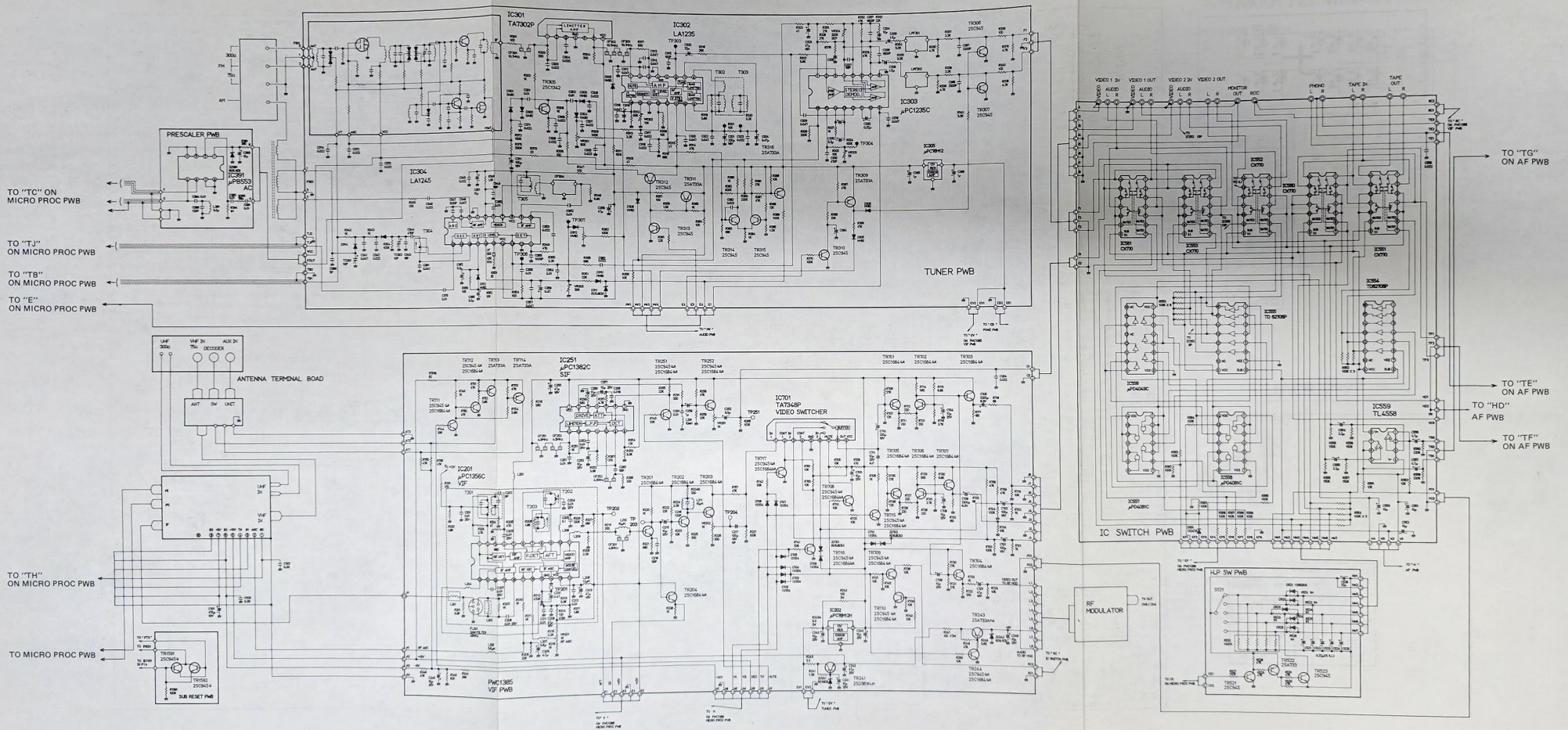
TUNER PWB
PRESCALER PWB
IC301
TA7302P
IC302
LA1235
IC303
μPC1235C
IC304
LA1245
IC391
μPB553
AC
TO "TC" ON
MICRO PROC PWB
TO "TJ"
ON MICRO PROC PWB
TO "TB"
ON MICRO PROC PWB
TO "E"
ON MICRO PROC PWB
ANTENNA TERMINAL BOAD
UHF
300Ω
VHF IN
75Ω
DECODER
AUX IN
ANT SW UNIT
IC251
μPC1382C
SIF
IC201
μPC1356C
VIF
IC701
TA7348P
VIDEO SWITCHER
PWC1385
VIF PWB
TO "TH"
ON MICRO PROC PWB
TO MICRO PROC PWB
SUB RESET PWB
RF
MODULATOR
IC SWITCH PWB
H.P. SW PWB
TO "TG"
ON AF PWB
TO "TE"
ON AF PWB
TO "HD"
AF PWB
TO "TF"
ON AF PWB

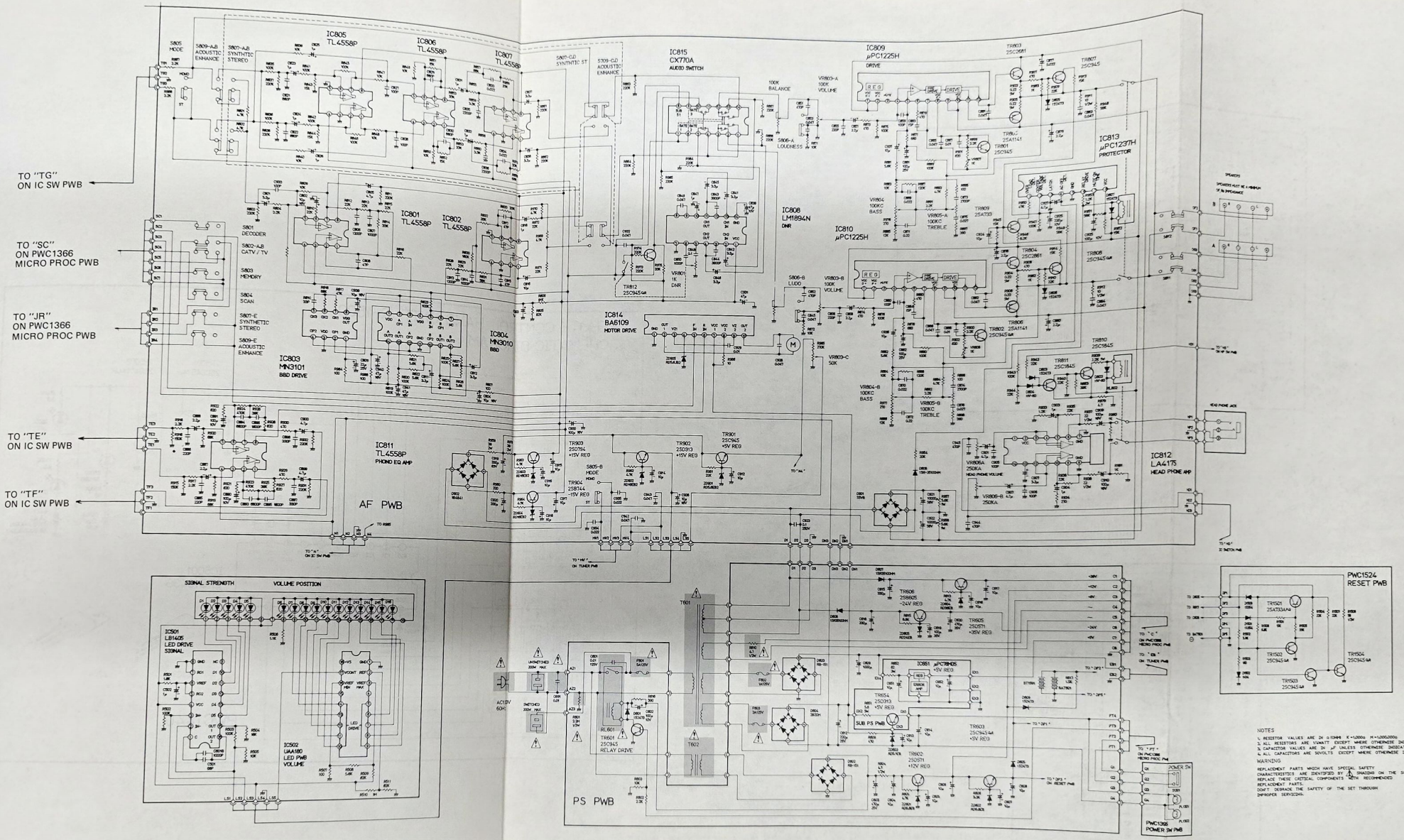
TO "TG" ON IC SW PWB
TO "SC" ON PWC1366 MICRO PROC PWB
TO "JR" ON PWC1366 MICRO PROC PWB
TO "TE" ON IC SW PWB
TO "TF" ON IC SW PWB
AF PWB
PS PWB
SUB PS PWB
PWC1524 RESET PWB
PWC1366 POWER SW PWB
IC805 TL4558P
IC806 TL4558P
IC807 TL4558P
IC801 TL4558P
IC802 TL4558P
IC803 MN3101 BBD DRIVE
IC804 MN3010 BBD
IC811 TL4558P PHOND EQ AMP
IC815 CX770A AUDIO SWITCH
IC809 µPC1225H DRIVE
IC813 µPC1237H PROTECTOR
IC808 LM1894N DNR
IC810 µPC1225H
IC814 BA6109 MOTOR DRIVE
IC812 LA4175 HEAD PHONE AMP
IC501 LB1405 LED DRIVE SIGNAL
IC502 UAA180 LED PWB VOLUME
SIGNAL STRENGTH
VOLUME POSITION
NOTES
WARNING

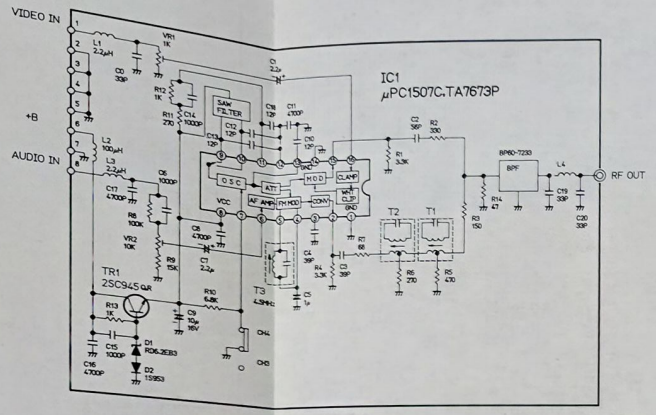

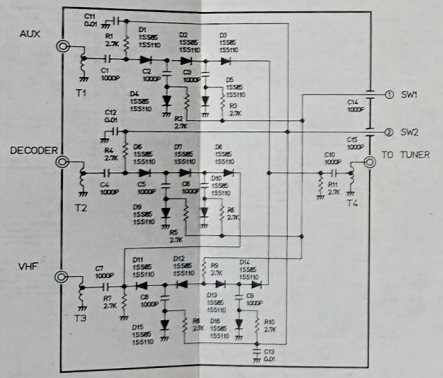

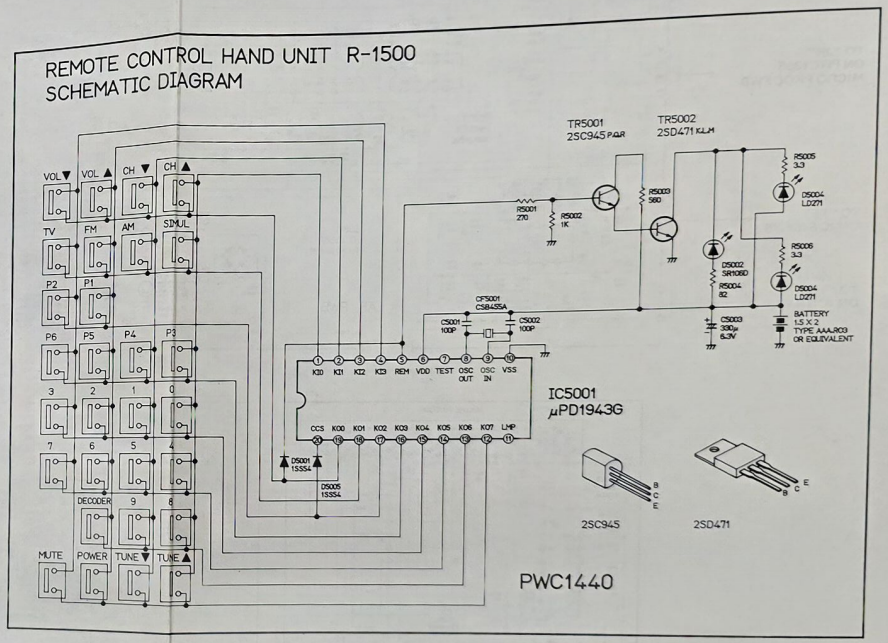

REMOTE CONTROL
HAND UNIT R-1500
SCHEMATIC DIAGRAM

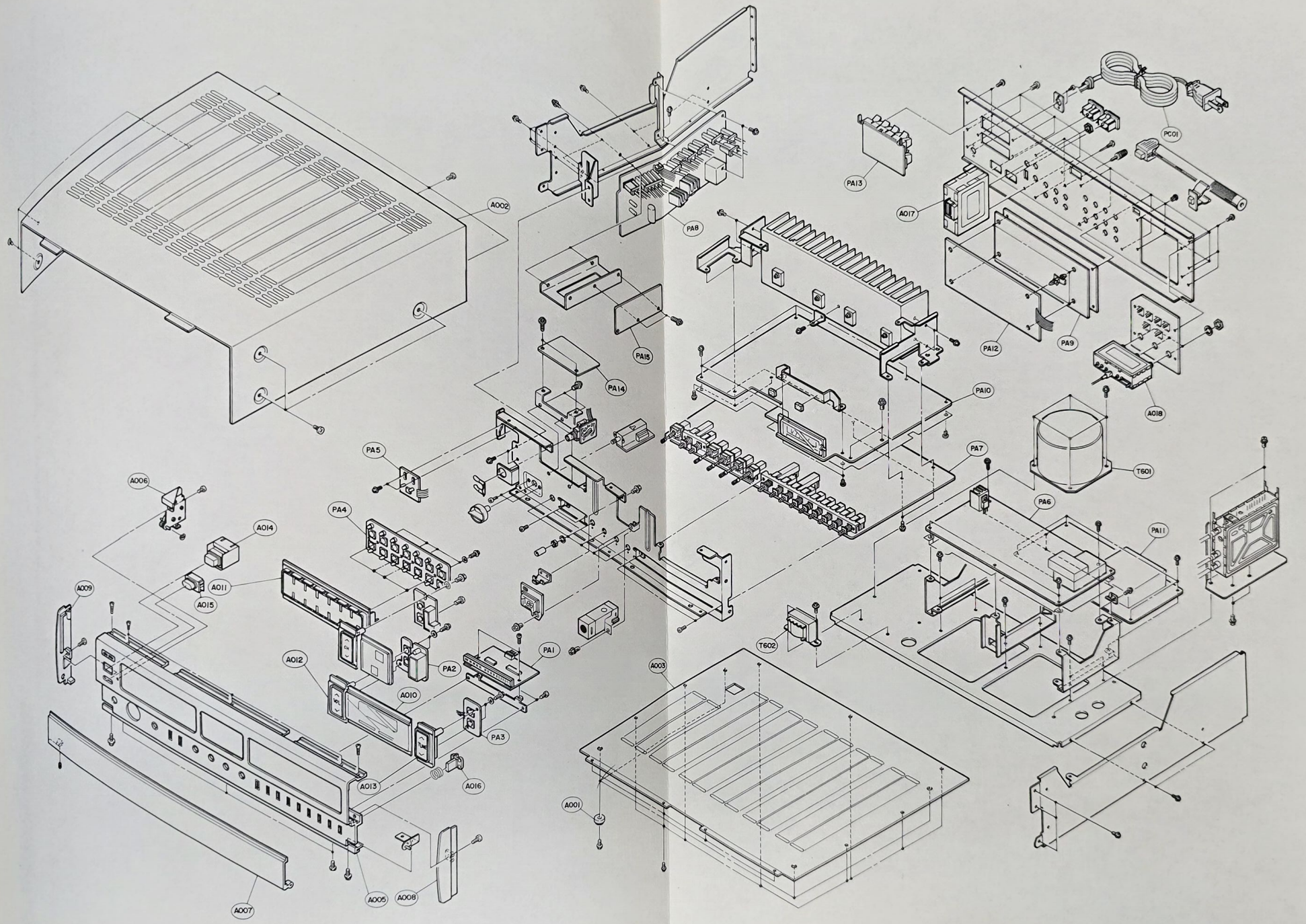
A002
PA8
PA13
PC01
A017
PA15
PA14
PA12
PA9
A018
PA10
PA5
PA7
T601
A006
PA4
PA6
A014
PA11
A009
A011
A015
T602
A012
PA1
PA2
A010
A003
PA3
A013
A016
A001
A005
A008
A007

REPLACEMENT PARTS LIST

Note: The components identified by ⚠ mark or with the symbol Nos. shaded are critical for safety. Replace only with parts Number specified.

SYMBOL	PARTS NO	DESCRIPTION	QTY
** CRT & TUNER **			
	34900013	FM FRONT END FD219U	1
	58625040	RF MODULATOR (RM-AA-0104)	1
	58627000	ANT SWITCH (RS-AA-0100)	1
	58634990	TUNER,CATV 133CH(ED3499)	1
** ICS **			
IC251	37001036	IC MPC1382C	1
IC202 IC305	37005011	IC MPC78M12H (REG)	2
IC651	37005012	IC MPC78M05H (REG)	1
IC201	37007014	IC MPC1356C2	1
IC1104	37009014	IC AN 5750 (HOR1)	1
IC1103	37011005	IC MPA56C (TR ARRAY)	1
IC1102	37011015	IC LM393 (COMP)	1
IC1204	37011033	IC UPA80C (DRIVE)	1
IC1002 IC1003	37011034	IC TD62301P (DRIV)	2
IC701	37011036	IC TA7348P (VIDEO SW)	1
IC1203	37051085	IC SN74LS145N (DECODE)	1
IC1101	37051438	MOS UPD1705C-016 (PLL)	1
IC1001	37051439	MOS UPD7507C-037	1
IC1201	37051440	MOS UPD1704C-011 (PLL)	1
IC559 IC801 IC804 IC805 IC806 IC807 IC811	37901079	IC TL4558P	7
IC809 IC810	37901083	IC UPC1225H	2
IC814	37901112	IC BA6109	1
IC812	37901114	IC LA4175	1
IC808	37901115	IC LM1894N	1
IC802	37901116	IC MN3010	1
IC803	37901117	IC MN3101	1
IC302	37901118	IC LA1235C	1
IC301	37902026	IC TA-7302P	1
IC303	37902036	IC MPC1235C	1
IC304	37902040	IC LA1245	1
IC551 IC552 IC553 IC560 IC561 IC815	37902042	ICCX-770	6
IC391	37903100	IC UPB-553AC	1
IC813	37903117	IC,UPC1237H	1
IC1205	37903167	IC LB1216 (TR-ARRAY)	1
IC556	37904007	IC MOS-UPD4049UBC	1
IC557 IC558	37904017	IC UPD4081	2

SYMBOL	PARTS NO	DESCRIPTION	QTY
** ICS **			
IC554 IC555	37904048	IC TD62706P	2
** TRANSISTORS **			
TR1001 TR1003 TR1004 TR1005 TR1102 TR1104 TR1109 TR1111 TR1113 TR1115 TR1116 TR1117 TR1119 TR1202 TR1205 TR1206 TR1207 TR1208 TR1209 TR1210 TR1501 TR1505 TR243 TR309 TR311 TR316 TR522 TR713 TR714 TR809	35003517	TR,2SA733/733A Q	30
TR904	35025517	TR,2SB744 Q	1
TR314 TR315 TR601 TR603 TR901	35047216	TR,2SC945 P	5
TR1002 TR1007 TR1101 TR1103 TR1106 TR1107 TR1108 TR1110 TR1112 TR1114 TR1118 TR1204 TR1211 TR1502 TR1503 TR1504 TR1506 TR1507 TR1508 TR1509 TR306 TR307 TR310 TR312 TR313 TR521 TR523 TR801 TR802 TR807 TR808 TR812	35047217	TR,2SC945Q	32
TR201 TR202 TR203 TR204 TR244 TR251 TR252 TR701 TR702 TR703 TR704 TR705 TR706 TR707 TR708 TR709 TR710 TR711 TR712 TR715 TR716 TR717	35057117	TR,2SC1684 Q	22
TR244	35057118	TR,2SC1684 R	1
TR241	35063112	TR,2SD381 L	1
TR602 TR605	35064212	TR 2SD571 L	2
TR903	35064917	TR 2SD794 Q	1
TR1105	35120715	TR,2SK1180	1
TR805 TR806	35905117	TR 2SA1141 Q	2
TR606	35920712	TR,2SB605L	1
TR305	35946702	TR,2SC-1342 B	1

SYMBOL	PARTS NO	DESCRIPTION	QTY
** TRANSISTORS **			
TR810 TR811	35947406	TR,2SC1845F	2
TR803 TR804	35933117	TR 2SC2681 Q	2
TR651 TR902	35964305	TR 2SD 313 E	2
TR1203	35990812	TR,2SK163L	1
** DIODES **			
D601 D605 D609	36001009	DIODE,SI,1S-2473	3
D1106 D1107 D1207	36001010	DIODE,SI,1S-2472	4
D1208			
D1213 D1501 D1503	36001015	DIODE,SI 1SS54	5
D1504 D1505			
D521 D522 D523	36001522	DIODE 1S-953	5
D524. D525			
D1502	36002023	DIODE 1K34A	1
D301 D302 D304	36002511	DIODE 0A-90	3
ZD241	36003056	DIODE,ZENER RD-16E(B)	1
ZD1101	36003068	DIODE,ZENER,RD5,6E(B)	1
ZD1001	36003090	DIODE RD3,9E (B)	1
ZD242	36003112	DIODE,RD9,1EB-3	1
ZD701 ZD702	36003121	DIODE RD6,8EB (3)	2
D314	36050021	DIODE KV1226	1
D802 D804 D805	360K1009	DIODE,SI,1S2473	5
D806 D807			
D1003 D1004 D1005	360K1015	DIODE,SI,1SS54	38
D1006 D1008 D1009			
D1101 D1102 D1104			
D1105 D1108 D1109			
D1201 D1202 D1203			
D1204 D1205 D1206			
D1209 D1210 D1212			
D1214 D1215 D1216			
D1217 D1218 D1219			
D1220 D1222 D1223			
D703 D704 D705			
D706 D707 D708			
D709 D710			
D602 D603	36108011	DIODE,RB-151	2
D17XX	36801079	DIODE,LIGHT-E TLG143	14
VT1201	36804003	FLT IND PANEL 7D8E	1
VT1101	36804004	FLT IND PANEL FG210C10	1
D901	36902057	DIODE S5VB 20	1
D902	36902084	RECTIFIER BLOCK 1B4B41	1

SYMBOL	PARTS NO	DESCRIPTION	QTY
** DIODES **			
D607 D608 D808	36902088	DIODE 1SR35100HM	3
D604	36902095	RECTIFIER BLOCK 2B2DM	1
D311	36905042	ZENER,DIODE RD-5,6EB1-M	1
ZD391 ZD603	36905161	ZENER DIODE RD5,1EB2(A)	2
ZD901 ZD905	36905164	ZENER DIODE RD5,6EB2(A)	2
ZD602	36905168	ZENER DIODE RD6,2EB3(A)	1
ZD601	36905192	ZENER DIODE RD13E B2(A)	1
ZD902 ZD903 ZD904	36905198	ZENER DIODE RD16E B2(A)	3
ZD605	36905214	ZENER DIODE RD24E B4(A)	1
ZD604	36905229	ZENER DIODE RD36E B3(A)	1
D305 D306 D308	369K1024	DIODE HV-80,AT	8
D310 D312 D313			
D315 D551			
D303	38005004	VARISTOR,VD1212	1
** TRANSFORMERS **			
T602	45003093	TRANS POWER UL CSA	1
T601	45006142	TRANS DOWER(AVR-1)	1
** VARIABLE RESISTORS **			
VR1101 VR201 VR202	41061507	R,VARIABLE 1K 0,15W	4
VR251			
VR803	41950486	VOLUME MOTOR	1
VR801	41950487	VOLUME PUSH 1KX2	1
VR802	41950488	VOLUME PUSH 100KMN	1
VR804 VR805	41950489	VOLUME PUSH 100KCX2	2
VR806	41950490	VOLUME PUSH 250KAX2	1
VR807 VR808	41951024	R,VARIABLE 1K	2
VR302	41951028	R,VARIABLE 10K	1
VR305	41951030	R,VARIABLE 30K	1
VR301 VR306	41951031	R,VARIABLE 50K	2
VR304	41951033	R,VARIABLE 200K	1
VR303	41952011	R,VARIABLE 5K,B	1

SYMBOL	PARTS NO	DESCRIPTION	QTY

** SWITCHES **

S1601 S1602 S17XX	65361002	SWITCH,PUSH BUTTON	16
RL601	65602021	RELAY G4W-1112P-US-TV8-P	1
S801	65904342	PUSH SWITCH	1
S802	65904344	PUSH SWITCH	1
RL801	65910049	RELEY AP-2 DC24V	1
RL802	65910059	RELAY FBR221 DC24V	1
S521	65912037	SWITCH,ROTARY SLIDE.	1

** PWB ASSY **

	87E47101	TUNER PWB FULL ASSY	1
	87E47201	AF PWB FULL ASSY	1
	87E47301	POWER PWB FULL ASSY	1
	87E47401	HADE,PHONEJACKPWBFULLASSY	1
	87E47501	IC,SW PWB FULL ASSY	1
	87E47601	SP,TERM.PWB FULL ASSY	1
	87E47901	HEADPHONE SW PWB ASSY	1
	93E17C02	VIF PWB ASSY	1
	93E17K01	FUNCTION SW PWB ASSY	1
	93E17M02	MICRO PROCESSOR PWB ASSY	1
	93E17T01	U-D SW,TUNE PWB ASSY	1
	93E17X01	SUB RESET PWB ASSY	1

** MISCELLANEOUS PARTS **

L204 L208 L209 L251	39021001	COIL,TRAP .177MHZ	4
FR1101 FR1102	39030004	R.NETWORK1/8W 7X100KM	2
FR1002	39030032	R,NETWOKE 1/8W 5X100KM	1
FR1201	39030040	R.NETWORK 4X100KM	1
FR1003	39030053	R,NETWORK 1/8W4X560K,J	1
FR1202 FR1203	39030054	R,NETWORK 1/8W7X220K,J	2
FR1001	39030055	R,NETWORK 1/8X100K,J	1
R552	39906021	R,BLOCK 100K M*4	1
R532	39906022	R,BLOCK,100K M*5	1
R553	39906023	R,BLOCK,100K M*6	1
LPF301 LPF302	39907005	FILTER	2
CT1101	44208002	C,TRIMMER	1
TC301 TC302	44930004	C,TRIMMER 10PF	2

SYMBOL	PARTS NO	DESCRIPTION	QTY

** MISCELLANEOUS PARTS **

	62910012	FM ANTENNA	1
X1101 X1201	64003012	CRYSTAL 4.5MHZ	2
F602	66651401	FUSE 1A T 125V UL 30MM	1
F603	66651404	FUSE 2A	1
F601	66901033	FUSE 5A T 125V UL 30MM	1
	68001006	BATTERY,DRY CELL	2
	68201002		1
BAT601	68300003	NICD BATTERY 4.8V	1
BAT602	70051052	PIN JACK	3
DN DN H.P	70052103	SOCKET JUMPER 3P	4
E MV MV	70052104	SOCKET JUMPER 4P	8
N PT Q			
HW SC	70052107	SOCKET JUMPER 7P	6
C	70052108	SOCKET JUMPER 8P	2
	70052109	SOCKET JUMPER 9P	2
	70102015	SOCKET,IC 42P	2
	70102019	IC SOCKET 22P	1
	70102139	IC SOKET 40P	1
	70521019	AC OUTLET	2
	70541021	OCTAL PIN (A)	21
	70799044	CABLE	2
	70799045	CABLE	1
	70799066	CABLE Y	1
	70799070	CABLE	1
	70799071	CABLE	1
	70799072	CABLE	2
	70799073	P.J CABLE	2
	71110176	TERMINAL ANTENNA	1
	71110907	MATCHING BOX,300-75FP	1
	71110922	PLUG 300-75	1
	75516004	LINE CORD SPT-2 BLACK	1
	79603301	REM HAND UNIT R-1500	1
	79603311	U-D SW,CH PWB ASSY	1
	79603321	U-D SW,VOL PWB ASSY	1
	79603331	P SW PWB ASSY	1
	79603351	LED METER PWB ASSY	1
	79603421	PHOTE SENS UNIT	1

SYMBOL	PARTS NO	DESCRIPTION	QTY

** CABINET & KNOBS **

	24362762	CABINET	1
	24362773	PLATE BOTTOM	1
	24362781	PANEL REAR A	1
	24438343	PANEL SIDE L	1
	24438352	PANEL SIDE R	1
	24438421	FILTER C	1
	24438431	FILTER A	1
	24438471	FILTER CH	1
	24438481	FILTER FM	1
	24438502	COLLAR VOL	5
	24439822	SEESAW BUTTON ASSY TV	1
	24439843	SEESAW BUTTON ASSY CH	1
	24439853	SEESAW BUTTTON ASSY VOL	1
	24439863	SEESAW BUTTON ASSY TUNE	1
	24468992	KNOV	1
	24469021	KNOV	5
	24469361	BUTTON PUSH ASSY(POWER)	1
	24469371	BUTTON PUSH ASSY(DOOR)	1
	24469381	BUTTON PUSH ASSY	11
	24724741	PANEL	
	24724762	DOOR A	
	24724791	BADGE	

** COILS & FILTERS **

T201			60245006	V.IFT 2ND	1
T203			60253020	V.IFT P.BET	1
T202			60253021	V.IFT AFT	1
L201			61011042	COIL (B) 1R7	1
L202			61011048	COIL (B) 1R4	1
L210	L211		61013013	COIL,FILTER 10UH	2
L391			61051711	FILTER COIL	1
L206			61067018	COIL,FILTER 12UH	1
L203	L205	L207	610F6014	COIL,FILTER 5.6UH	3
CF251	CF253		61105001	FILTER,SIF S4R5MS3	2
CF201			61107004	CERAMIC TRAP 4.5MW3	1
CF252			61112011	CERAMIC DISCRIMINATOR	1
FL201			61120032	VIF SAWF SAF45MH	1
T305			61902070	AM IFT	1
T302			61902083	FM DET TRANS LA1235 A	1
T303			61902084	FM DET TRANS LA1235 B	1
			61903067	BAR ANTENNA COIL	1
T304			61904438	COIL,MW OSC	1

SYMBOL	PARTS NO	DESCRIPTION	QTY

** COILS & FILTERS **

L291		61911121	COIL RC-103 J	1
CF301		61919005	FILTER 10.7MA8A RED	1
CF304		61919041	CERAMIC FILTER,SFP450H	1
CF305		61919042	CERAMIC FILTER,BFU450C	1
CF302	CF303	61919073	FILTER SFE10.7MS2GY-A	2

** PACKING MATERILS **

	24826863	FILLER CARTON L	1
	24826873	FILLER CARTON R	1
	24826882	STORAGE BOX	1
	24826891	CARTON BOX	1
	24827691	FILLER CARTON	1
	78050641	INSTRUCTION BOOK AVS-1500	1

** RESISTORS **

R1508			40003022	R,SOLID 56H 10% 1/2W	1
R214			40003026	R,SOLID 120H 10% 1/2W	1
R601			40023577	R,SOLID 2.2M 10% 1/2W	1
R718	R733		40136145	R,CARBON 68H 5% 1/4W	2
R701	R702		40136146	R,CARBON 75H 5% 1/4W	2
R1503			40136155	R,CARBON 180H 5% 1/4W	1
R216	R291		40136161	R,CARBON 330H 5% 1/4W	2
R1129	R215		40136173	R,CARBON 1.0K 5% 1/4W	2
R241			40136175	R,CARBON 1.2K 5% 1/4W	1
R716			40136183	R,CARBON 2.7K 5% 1/4W	1
R1502			40136187	R,CARBON 3.9K 5% 1/4W	1
R1506			40136193	R,CARBON 6.8K 5% 1/4W	1
R1516			40136197	R,CARBON 10K 5% 1/4W	1
R1501	R1514		40136201	R,CARBON 15K 5% 1/4W	2
R1515			40136203	R,CARBON 18K 5% 1/4W	1
R1504	R1507	R1509	40136205	R,CARBON 22K 5% 1/4W	5
R1510	R1511				
R1505			40136209	R,CARBON 33K 5% 1/4W	1
R755			40136213	R,CARBON 47K 5% 1/4W	1
R1512	R1513		40136215	R,CARBON 56K 5% 1/4W	2
R228			40146173	R,CARBON 1.0K 5% 1/4W	1
R751B			40177147	R,CARBON 82K 5% 1/4W	1

** RESISTORS **

SYMBOL	PARTS NO	DESCRIPTION	QTY
R738	401C6625	R,CARBON 10H 5% 1/4W	1
R1227	401C6629	R,CARBON 15H 5% 1/4W	1
R1209 R1261 R204	401C6641	R,CARBON 47H 5% 1/4W	3
R702	401C6646	R,CARBON 75H 5% 1/4W	1
R1162	401C6647	R,CARBON 82H 5% 1/4W	1
R1208	401C6649	R,CARBON 100H 5% 1/4W	1
R1009 R1010 R1011	401C6653	R,CARBON 150H 5% 1/4W	15
R1012 R1013 R1014			
R1015 R1016 R1153			
R1220 R1221 R1223			
R1224 R1225 R1226			
R717 R732	401C6655	R,CARBON 180H 5% 1/4W	2
R711 R712 R713	401C6657	R,CARBON 220H 5% 1/4W	6
R726 R727 R728			
R231 R267	401C6659	R,CARBON 270H 5% 1/4W	2
R219 R224B R225	401C6661	R,CARBON 330H 5%1/4W	6
R226 R268 R722			
R1159 R1245 R205	401C6665	R,CARBON 470H 5% 1/4W	4
R709			
R1017 R1018 R218	401C6667	R,CARBON 560H 5% 1/4W	6
R256 R714 R729			
R1169 R1214 R221	401C6669	R,CARBON 680H 5% 1/4W	3
R1211	401C6671	R,CARBON 820H 5% 1/4W	1
R1105 R1128 R1158	401C6673	R,CARBON 1.0K 5% 1/4W	11
R1243 R202 R210			
R211 R251 R708			
R723 R749			
R1210	401C6675	R,CARBON 1.2K 5% 1/4W	1
R1156 R220	401C6677	R,CARBON 1.5K 5% 1/4W	2
R206 R217 R232	401C6679	R,CARBON 1.8K 5% 1/4W	3
R1104 R1166 R1168	401C6681	R,CARBON 2.2K 5% 1/4W	5
R208 R224			
R1111 R1112 R1113	401C6683	R,CARBON 2.7K 5% 1/4W	10
R1114 R1115 R1116			
R1117 R1172 R203			
R731			
R1132 R1134 R1160	401C6685	R,CARBON 3.3K 5% 1/4W	6
R201 R213 R253			
R1215 R252	401C6687	R,CARBON 3.9K 5% 1/4W	2
R1101 R1157 R1161	401C6689	R,CARBON 4.7K 5% 1/4W	4
R257			
R249 R752 R754	401C6691	R,CARBON 5.6K 5% 1/4W	3
R1102 R1163 R715	401C6693	R,CARBON 6.8K 5% 1/4W	4

** RESISTORS **

SYMBOL	PARTS NO	DESCRIPTION	QTY
R730	401C6693	R,CARBON 6.8K 5% 1/4W	4
R1001 R1019 R1021	401C6697	R,CARBON 10K 5% 1/4W	34
R1029 R1103 R1124			
R1127 R1133 R1140			
R1144 R1148 R1152			
R1167 R1203 R1230			
R1233 R1237 R1240			
R1241 R1242 R223			
R250 R705 R710			
R719 R724 R725			
R734 R737 R739			
R740 R743 R760			
R761			
R1228 R254 R707	401C6699	R,CARBON 12K 5% 1/4W	4
R736			
R1139 R1143 R1147	401C6701	R,CARBON 15K 5% 1/4W	5
R1151 R1164			
R1002 R1024 R1026	401C6705	R,CARBON 22K 5% 1/4W	25
R1030 R1031 R1032			
R1033 R1034 R1035			
R1036 R1037 R1038			
R1039 R1122 R1125			
R1212 R1213 R1219			
R1231 R1235 R1238			
R209 R222 R255			
R259			
R1171 R706 R720	401C6707	R,CARBON 27K 5% 1/4W	5
R721 R735			
R1023 R1025 R1130	401C6709	R,CARBON 33K 5% 1/4W	16
R1170 R1202 R1229			
R1232 R1234 R1236			
R1239 R1244 R1250			
R741 R742 R744			
R745			
R244	401C6711	R,CARBON 39K 5%	1
R1020 R1107 R1108	401C6713	R,CARBON 47K 5% 1/4W	19
R1131 R1137 R1141			
R1145 R1149 R1154			
R246 R248 R258			
R750 R751 R753			
R756 R757 R758			
R759			
R1106 R1251 R207	401C6717	R,CARBON 68K 5% 1/4W	3
R1008 R245	401C6719	R,CARBON 82K 5% 1/4W	2
R1004 R1005 R1006	401C6721	R,CARBON 100K 5% 1/4W	26
R1007 R1040 R1109			

SYMBOL	PARTS NO	DESCRIPTION	QTY
** RESISTORS **			
R1110 R1118 R1119	401C6721	R,CARBON 100K 5% 1/4W	26
R1120 R1121 R1123			
R1126 R1135 R1136			
R1138 R1142 R1146			
R1150 R1216 R1218			
R1252 R227 R266			
R703 R704			
R1042 R229	401C6723	R,CARBON 120K 5% 1/4W	2
R1155 R1247	401C6729	R,CARBON 220K 5% 1/4W	2
R1041 R212	401C6737	R,CARBON 470K 5%	2
R953	40351175	R,METAL 1.2K 5% 1W	1
R957 R958	40351191	R,METAL 5.6K 5% 1W	2
R243A	40352113	R,METAL 3.3M 5% 2W	1
R242	40352149	R,METAL 100M 5% 2W	1
R1165	40402657	R,METAL 220M 1% 1/4W	1
R243	40405109	R,METAL 2.2M 5% 1/4W	1
R1180	40405125	R,METAL 10M 5% 1/4W	1
R247	40812649	R,FUSE 100M 5% 1/2W	1
R604 R610 R612	40912117	R,CARBON 4.7M 5% 1/2W	4
R614			
R911 R912	40912125	R,CARBON 10M 5% 1/2W	2
R937 R938	40912133	R,CARBON 22M 5% 1/2W	2
R939	40912175	R,CARBON 1.2K 5% 1/2W	1
R966	40913125	R,CARBON 10M 5% 1/4W	1
R807 R986 R988	40913149	R,CARBON 100M 5% 1/4W	3
R616	40913153	R,CARBON 150M 5% 1/4W	1
R960	40913157	R,CARBON 220M 5% 1/4W	1
R962 R963 R964	40913189	R,CARBON 4.7K 5% 1/4W	3
R961	40913205	R,CARBON 22K 5% 1/4W	1
R903 R904 R905	40920056	R,WIRE 5W 22M 5%	4
R906			
R959 R978	40933056	R,METAL 39M 5% 2W	2
R632	40970013	R,WIRE 82M 3W	1
R651	40970014	R,WIRE 5.6M	1
R393	40982143	R,CARBON 56M 5% 1/4W	1
R391	40982163	R,CARBON 390M 5% 1/4W	1
R609	40982165	R,CARBON 470M 5% 1/4W	1
R617	40982169	R,CARBON 680M 5% 1/4W	1
R602	40982181	R,CARBON 2.2K 5% 1/4W	1
R606	40982185	R,CARBON 3.3K 5% 1/4W	1
R605 R613	40982189	R,CARBON 4.7K 5% 1/4W	2
R615	40982193	R,CARBON 6.8K 5% 1/4W	1

SYMBOL	PARTS NO	DESCRIPTION	QTY
** RESISTORS **			
R399 R603	40982197	R,CARBON 10K 5% 1/4W	2
R528 R529 R530	40982213	R,CARBON 47K 5% 1/4W	4
R531			
R806	40982220	R,CARBON 91K 5% 1/4W	1
R527	40982221	R,CARBON 100K 5% 1/4W	1
R915	40982225	R,CARBON 150K 5% 1/4W	1
R394 R521 R522	40982245	R,CARBON 1.0M 5% 1/4W	4
R525			
R523	40983213	R,CARBON 47K 5% 1/4W	1
R524 R526	40983245	R,CARBON 1.0M 5% 1/4W	2
R979	409M2617	R,CARBON 4.7M 5% 1/4W	1
R987	409M2625	R,CARBON 10M 5% 1/4W	1
R373	409M2633	R,CARBON 22M 5% 1/4W	1
R305 R315 R323	409M2641	R,CARBON 47M 5% 1/4W	4
R357			
R353	409M2647	R,CARBON 82M 5% 1/4W	1
R301 R308 R339	409M2649	R,CARBON 100M 5% 1/4W	8
R340 R347 R354			
R895 R896			
R345	409M2657	R,CARBON 220M 5% 1/4W	1
R304 R976 R977	409M2659	R,CARBON 270M 5% 1/4W	3
R303 R307 R317	409M2661	R,CARBON 330M 5% 1/4W	3
R897 R898	409M2663	R,CARBON 390M 5% 1/4W	2
R349 R873 R874	409M2665	R,CARBON 470M 5% 1/4W	9
R879 R880 R907			
R908 R929 R930			
R877 R878	409M2669	R,CARBON 680M 5% 1/4W	2
R901 R902 R921	409M2671	R,CARBON 820M 5% 1/4W	6
R922 R927 R928			
R302 R306 R327	409M2673	R,CARBON 1.0K 5% 1/4W	23
R342 R343 R360			
R384 R571 R572			
R573 R574 R575			
R576 R577 R578			
R579 R580 R581			
R582 R980 R981			
R982 R983			
R885 R886 R933	409M2675	R,CARBON 1.2K 5% 1/4W	4
R934			
R346 R359 R385	409M2677	R,CARBON 1.5K 5% 1/4W	3
R313 R320 R337	409M2681	R,CARBON 2.2K 5% 1/4W	14
R338 R350 R804			
R891 R892 R899			
R900 R917 R918			

SYMBOL	PARTS NO	DESCRIPTION	QTY

** RESISTORS **

SYMBOL	PARTS NO	DESCRIPTION	QTY
R967 R968	409H2681	R,CARBON 2.2K 5% 1/4W	14
R333 R334 R341	409H2683	R,CARBON 3.3K 5% 1/4W	5
R859 R860			
R322	409H2687	R,CARBON 3.9K 5% 1/4W	1
R335 R336 R378	409H2689	R,CARBON 4.7K 5% 1/4W	10
R379 R801 R802			
R893 R894 R969			
R970			
R319 R821 R822	409H2691	R,CARBON 5.6K 5% 1/4W	7
R826 R827 R881			
R882			
R368	409H2693	R,CARBON 6.8K 5% 1/4W	1
R946	409H2695	R,CARBON 8.2K 5% 1/4W	1
R321 R332 R352	409H2697	R,CARBON 10K 5% 1/4W	21
R355 R356 R364			
R376 R388 R561			
R562 R809 R839			
R840 R847 R848			
R849 R850 R871			
R872 R883 R884			
R386	409H2699	R,CARBON 12K 5% 1/4W	1
R325 R380 R843	409H2701	R,CARBON 15K 5% 1/4W	10
R844 R851 R852			
R913 R914 R945			
R952			
R956	409H2704	R,CARBON 20K 5% 1/4W	1
R351 R361 R368	409H2705	R,CARBON 22K 5% 1/4W	18
R810 R812 R813			
R815 R816 R828			
R829 R909 R910			
R935 R936 R940			
R944 R971 R972			
R328 R331 R381	409H2707	R,CARBON 27K 5% 1/4W	3
R814 R832 R833	409H2709	R,CARBON 33K 5% 1/4W	13
R853 R854 R855			
R856 R865 R866			
R869 R870 R973			
R975			
R318 R925 R926	409H2711	R,CARBON 39K 5% 1/4W	4
R941			
R314 R329 R330	409H2713	R,CARBON 47K 5% 1/4W	8
R367 R369 R387			
R817 R950			
R312 R808 R831	409H2715	R,CARBON 56K 5% 1/4W	6
R948 R949 R951			

SYMBOL	PARTS NO	DESCRIPTION	QTY

** RESISTORS **

SYMBOL	PARTS NO	DESCRIPTION	QTY
R316 R358 R383	409H2717	R,CARBON 68K 5% 1/4W	8
R818 R857 R858			
R919 R920	409H2719	R,CARBON 82K 5% 1/4W	1
R805	409H2721	R,CARBON 100K 5% 1/4W	32
R309 R324 R344			
R362 R370 R389			
R551 R563 R564			
R565 R566 R567			
R568 R569 R570			
R819 R820 R823			
R824 R825 R835			
R836 R841 R842			
R845 R846 R875			
R876 R889 R890			
R943 R947	409H2723	R,CARBON 120K 5% 1/4W	2
R887 R888	409H2725	R,CARBON 150K 5% 1/4W	7
R311 R372 R555			
R556 R557 R558			
R916			
R830	409H2727	R,CARBON 180K 5% 1/4W	1
R837 R838	409H2728	R,CARBON 200K 5% 1/4W	2
R326 R559 R560	409H2729	R,CARBON 220K 5% 1/4W	16
R803 R811 R861			
R862 R863 R864			
R867 R868 R931			
R932 R974 R984			
R985	409H2731	R,CARBON 270K 5% 1/4W	1
R965	409H2733	R,CARBON 330K 5% 1/4W	1
R375			
R390 R923 R924	409H2737	R,CARBON 470K 5% 1/4W	3
R382	409H2743	R,CARBON 820K 5% 1/4W	1

** CAPACITORS **

C1207	C201	C211	4202J525	C,CERAMIC 50V 0.01UF	3
C691			42053125	C,CERAMIC 400V 0.01UF	1
C1105			4208J525	C,CERAMIC 50V 0.01UF	1
C1104			42110437	C,CERAMIC 50V 0.1UF	1
C394			42110925	C,CERAMIC 50V 0.01UF	1
C320			42110933	C,CERAMIC 50V 0.047UF	1
C251	C252	C391	4211K425	C,CERAMIC 50V 0.01UF	5
C392	C929				
C558	C877	C934	4211K429	C,CERAMIC 50V 0.022UF	4

SYMBOL			PARTS NO	DESCRIPTION	QTY
			** CAPACITORS **		
C935			4211K429	C,CERAMIC 50V 0.022UF	4
C312	C313	C314	4211K433	C,CERAMIC 50V 0.047UF	12
C348	C376	C849			
C883	C884	C928			
C932	C942	C943			
C1212			4213K213	C,CERMIC 50V 1000PF	1
C205	C212		4219J002	C,CERAMIC 50V 0.1UF	2
C347	C355		421A0413	C,CERAMIC 50V 1000PF	2
C301	C302	C350	421A0425	C,CERAMIC 50V 0.01UF	8
C352	C354	C356			
C375	C377				
C264	C303	C304	421A0429	C,CERAMIC 50V 0.022UF	19
C305	C306	C307			
C308	C309	C316			
C317	C323	C362			
C345	C346	C353			
C371	C372	C373			
C374					
C318	C322	C341	421A0433	C,CERAMIC 50V 0.047UF	5
C357	C361				
C328	C851	C852	421C0209	C,CERAMIC 50V 470PF	5
C944	C945				
C821	C822	C829	421C0211	C,CERAMIC 5QV 680PF	4
C830					
C203	C204	C207	421C1025	C,CERAMIC 25V 0.01UF	4
C208					
C218			42312075	C,CERAMIC 50V 56PF	1
C396			4231A047	C,CERAMIC 50V 120PF	1
C810			4231B033	C,CERAMIC 50V 33PF	1
C263			4231B039	C,CERAMIC 50V 56PF	1
C399			4231C012	C,CERAMIC 50V 5PF	1
C349			42332039	C,CERAMIC 50V 56PF	1
C343			42333029	C,CERAMIC 50V 18PF	1
C863	C864		423A1025	C,CERAMIC 50V 15PF	2
C327			423A1041	C,CERAMIC 50V 68PF	1
C315	C827	C828	423A1045	C,CERAMIC 50V 100PF	8
C859	C860	C905			
C906	C933				
C855	C856	C885	423A1053	C,CERAMIC 50V 220PF	4
C886					
C897	C898		423A1057	C,CERAMIC 50V 330PF	2
C202			423A2013	C,CERAMIC 50V 8PF	1
C808	C815	C817	423A2037	C,CERMIC 50V 47PF	3
C1205	C1206		423A2065	C,CERAMIC 50V 22PF	2

SYMBOL			PARTS NO	DESCRIPTION	QTY
			** CAPACITORS **		
C1002			423A2069	C,CERAMIC 50V 33PF	1
C1102			423A2071	C,CERAMIC 50V 39PF	1
C216			423A2101	C,CERAMIC 50V 120PF	1
C1118			42703909	C,FILM 100V 4700PF	1
C102	C103		42754916	C,FILM 50V 0.33UF	2
C1121			4275D001	C,FILM 50V 1000PF	1
C1111			4275D051	C,FILM 50V 1000PF	1
C1120			4275D057	C,FILM 50V 3300PF	1
C1114			4275D065	C,FILM 50V 0.015UF	1
C258			4275D066	C,FILM 50V 0.018UF	1
C1107			4275D067	C,FILM 50V 0.022UF	1
C1122			4275D072	C,FILM 50V 0.056UF	1
C1131			4275D073	C,FILM 50V 0.068UF	1
C1113			427E4008	C,FILM 50V 0.015UF	1
C1116			427E4068	C,FILM 50V 0.027UF	1
C1119			427E6051	C,FILM 50V 1000PF	1
C1101	C1112	C1117	427E6059	C,FILM 50V 4700PF	3
C291			427E6063	C,FILM 50V 0.01UF	1
C601			42940060	C,FILM 125V 0.01UF	1
C330	C379		42972017	C,FILM 125V 470PF	2
C329			42974022	C,FILM 50V 0.047UF 5%	1
C923			42974307	C,FILM 250V 0.1UF 10%	1
C873	C874		4297D001	C,FILM 50V 2700PF	2
C871	C872		4297D002	C,FILM 50V 0.22MF	2
C807	C814	C850	4297D009	C,FILM 50V 1000PF	3
C875	C876		4297D020	C,FILM 50V 27000PF	2
C848			4297D026	C,FILM 50V 0.1MF	1
C336	C337	C895	429G4007	C,FILM 50V 1800PF 5%	4
C896					
C806	C813		429G4010	C,FILM 50V 1200PF 5%	2
C367	C368	C835	429G4012	C,FILM 50V 2200PF 5%	4
C836					
C843	C844		429G4013	C,FILM 50V 3900PF 5%	2
C893	C894		429G4015	C,FILM 50V 6800PF 5%	2
C867	C868		429G4016	C,FILM 50V 0.01UF 5%	2
C853	C854	C865	429G4022	C,FILM 50V 0.047UF 5%	6
C866	C881	C882			
C363	C833	C834	429G4065	C,FILM 50V 0.022UF 5%	5
C869	C870				
C839			43011015	C,ELEC 10V 47UF	1
C1210			43019007	C,ELEC 6.3V 1000UF	1

SYMBOL	PARTS NO	DESCRIPTION	QTY
** CAPACITORS **			
C705 C709	43019008	C,ELEC 6.3V 2200UF	2
C101	43019019	C,ELEC 10V 470UF	1
C1211	43019055	C,ECEC 35V 220UF	1
C1208	4301D101	C,ELEC 50V 0.22UF	1
C1203	4301F026	C,ELEC 16V 470UF	1
C1123	4301J017	C,ELEC 10V 220UF	1
C1501	4301J026	C,ELEC 16V 22UF	1
C213	4301J028	C,ELEC 16V 47UF	1
C710	4301J030	C,ELEC 16V220UF	1
C244	4301J038	C,ELEC 25V 10UF	1
C1126 C1213	4301J055	C,ELEC 35V 220UF	2
C1106B	4301J064	C,ELEC 50V 4.7UF	1
C242 C243	4302B069	C,ELEC 25V 47UF	2
C246 C706	4302C046	C,ELEC 16V 10UF	2
C707	4302C050	C,ELEC 16V 100UF	1
C918	4302C066	C,ELEC 25V 10UF	1
C241	4302C106	C,ELEC 50V 10UF	1
C1110	430A4101	C,ELEC 50V 0.22UF	1
C210	430A4103	C,ELEC 50V 0.47UF	1
C1261 C259	430A4105	C,ELEC 50V 1UF	2
C701 C702	430A5036	C,ELEC 16V 100UF	2
C1103 C1204	430A9016	C,ELEC 10V 100UF	2
C206 C255	430A9028	C,ELEC 16V 47UF	2
C1115 C209	430A9037	C,ELEC 25V 10UF	2
C1124 C215 C245 C253 C256 C257 C703 C704 C708	430A9038	C,ELEC 25V 10UF	9
C1106	430A9062	C,ELEC 50V. 2.2UF	1
C1003 C262	430A9063	C,ELEC 50V 3.3UF	2
C217	43311014	C,ELEC 16V 100UF	1
C711	43311023	C,ELEC 25V 10UF	1
C1209	43313056	C,ELEC 50V2.2UF	1
C1125	435A5070	C,TANTALUM 35V 0.68UF	1
C921 C922	43910089	C,ELEC 56V 1000UF	2
C919	43910110	C,ELEC 63V 330PF	1
C609	43910111	C,ELEC 50V 1000PF	1
C612	43910112	C,ELEC 16V 2200PF	1
C521 C522 C523 C524 C525	43980049	C,ELEC 50V 0.22UF	5
C554 C555	43980055	C,ELEC 50V 2.2UF	2
C556 C557 C805	43980057	C,ELEC 50V 4.7UF	7

SYMBOL	PARTS NO	DESCRIPTION	QTY
** CAPACITORS **			
C899 C900 C901 C902	43980057	C,ELEC 50V 4.7UF	7
C939	43983025	C,ELEC 16V 10UF	1
C931 C940 C941	43983028	C,ELEC 16V 47UF	3
C602	43993015	C,ELEC 10V 100UF	1
C925	43993016	C,ELEC 10V 220UF	1
C804 C930	43993028	C,ELEC 16V 100UF	2
C321	43993029	C,ELEC 16V 220UF	1
C326	43993031	C,ELEC 16V 470UF	1
C325	43993038	C,ELEC 25V 22UF	1
C619	43993053	C,ELEC 35V 100UF	1
C603 C620	43993056	C,ELEC 35V 470UF	2
C878 C879 C880	43993061	C,ELEC 50V 2.2UF	3
C927	43993063	C,ELEC 50V 4.7UF	1
C393 C526 C551 C552 C553 C604 C605 C606 C607 C608 C613 C614 C616 C617 C651 C652	43993064	C,ELEC 50V 10UF	16
C615 C618 C920	43993070	C,ELEC 50V 330UF	3
C333	439H0049	C,ELEC 50V 0.22UF	1
C823 C824 C825 C826	439H0053	C,ELEC 50V 1.0UF	4
C331 C338 C339	439H0054	C,ELEC 50V 1.5UF	3
C857 C858 C887 C888	439H0055	C,ELEC 50V 2.2UF	4
C332 C801 C837 C838 C841 C842 C845 C846	439H0056	C,ELEC 50V 3.3UF	8
C816 C818	439H0059	C,ELEC 50V 10UF	2
C891 C892 C926	439J3015	C,ELEC 10V 100UF	3
C311 C861 C862	439J3041	C,ELEC 25V 100UF	5
C909 C910 C907	439J3051	C,ELEC 35V 33UF	1
C324 C358	439J3059	C,ELEC 50V 0.47UF	2
C319 C365 C366 C378 C803 C831 C832 C847 C903 C904	439J3060	C,ELEC 50V 1.0UF	10
C360 C362 C811 C812	439J3062	C,ELEC 50V 3.3UF	4
C364	439J3063	C,ELEC 50V 4.7UF	1

SYMBOL	PARTS NO	DESCRIPTION	QTY
** CAPACITORS **			
C334 C335 C351 C802 C809 C819 C820 C912 C914 C915 C916 C917 C924 C936 C937 C938	439J3064	C,ELEC 50V 10UF	16
C359	439J3067	C,ELEC 50V 47UF	1

JENSEN SOUND LABORATORIES
an ESMARK Company
4136 North United Parkway
Schiller Park, Illinois 60176
(312) 671-5680

If you have any questions about operating or installation you can write or call Jensen toll free at (800) 323-0221. In Illinois call (312) 671-5680.